NC STATE UNIVERSITY

Tacho Lycos

2025 NASA Student Launch

Flight Readiness Review



High-Powered Rocketry Club at NC State University
1840 Entrepreneur Drive
Raleigh, NC 27606

March 17, 2025

Common Abbreviations and Nomenclature

ADC	= Analog to Digital Converter
AGL	= Above Ground Level
AIOC	= Ham Radio All-in-one Cable
APCP	= Ammonium Perchlorate Composite Propellant
APRS	= Automatic Packet Reporting System
ARR	= Always Ready Rocketry
AV	= Avionics
AVAB	= Avionics and Air Brakes Bay
CAD	= Computer Aided Design
CATO	= Catastrophe At Take Off
CDR	= Critical Design Review
CG	= Center of Gravity
CHARGE	= Current Handling & Automatic Regulation for Grid Energy
CNC	= Computer Numerical Control
CP	= Center of Pressure
CT	= Central Time
ECE	= Electrical and Computer Engineering
E Council	= Engineering Council
EMF	= Electromotive Force
ETF	= Educational and Technology Fee
EYE	= Engineer Your own Experience
FAA	= Federal Aviation Administration
FM	= Frequency Modulation
FMEA	= Failure Modes and Effects Analysis
FRR	= Flight Readiness Review
FSM	= Finite State Machine
FUSE	= Flight Unit for Sensing & Evaluation
GPS	= Global Positioning System
HPRC	= High-Powered Rocketry Club
IMU	= Inertial Measurement Unit
IPL	= Inverted Pursuits Lab
LED	= Light-Emitting Diode
LiPo	= Lithium Polymer
LRR	= Lab Rat Rocketry
LRR	= Launch Readiness Review
LV	= Launch Vehicle
MAE	= Mechanical & Aerospace Engineering
MSFC	= Marshall Space Flight Center
N/A	= Not Applicable
NACA	= National Advisory Committee for Aeronautics
NAR	= National Association of Rocketry
NASA	= National Aeronautics and Space Administration
NCSG	= North Carolina Space Grant
NCSU	= North Carolina State University
PCB	= Printed Circuit Board
PDF	= Payload Demonstration Flight
PDR	= Preliminary Design Review
PETG	= Polyethylene Terephthalate Glycol
PH	= Performance Hobbies
PID	= Proportional-Integral-Derivative
PLA	= Polylactic Acid
PLAR	= Post-Launch Assessment Review
PPE	= Personal Protective Equipment
Q&A	= Questions and Answers

RMFS = Removable Modular Fin System
RMS = Reloadable Motor System
RTC = Real Time Clock
RSO = Range Safety Officer
SDS = Safety Data Sheets
SGA = NC State Student Government
SGov = Student Government
SL = Student Launch
SPI = Serial Peripheral Interface
SST = Shear Stress Transport
STEM = Science, Technology, Engineering, and Mathematics
STEMCRaFT = STEMnaut Capsule Radio Frequency Transmitter
STL = Stereolithography (File Format)
SWITCH = Scheduled Wireless Information Transmission & Compilation Hub
TAP = Technical Advisory Panel (TRA)
TBD = To Be Determined
TNC = Terminal Node Controllers
TORCH = Transmission Operations Relay for Capsule Handling
TRA = Tripoli Rocketry Association
TTS = Text to Speech (TRA)
UART = Universal Asynchronous Receiver/Transmitter
USLI = University Student Launch Initiative
VDF = Vehicle Demonstration Flight
VV&T = Verification, Validation, and Testing
WARHEAD = Wireless APRS Relay for High-altitude Environmental & Atmospheric Data

Contents

1 Summary of Report **1**
- 1.1 Team Summary . . . 1
  - 1.1.1 Team Name and Mailing Address . . . 1
  - 1.1.2 Final Launch Location . . . 1
  - 1.1.3 Team Mentor and Advisor . . . 1
  - 1.1.4 Time Spent on FRR Milestone . . . 1
- 1.2 Launch Vehicle Summary . . . 1
  - 1.2.1 Vehicle Size and Mass . . . 1
  - 1.2.2 Motor Selection . . . 1
  - 1.2.3 Official Target Altitude . . . 1
  - 1.2.4 Recovery System . . . 1
  - 1.2.5 Rail Size . . . 1
- 1.3 Payload Summary . . . 1

2 Changes Made Since CDR **2**
- 2.1 Changes Made to Vehicle Criteria . . . 2
- 2.2 Changes Made to Payload Criteria . . . 2
- 2.3 Changes Made to Project Plan . . . 2

3 Vehicle Criteria **3**
- 3.1 Launch Vehicle Mission Statement and Success Criteria . . . 3
  - 3.1.1 Mission Statement . . . 3
  - 3.1.2 Success Criteria . . . 3
- 3.2 Launch Vehicle Design Changes Since CDR . . . 3
  - 3.2.1 STEMCRaFT Camera . . . 3
  - 3.2.2 Forward Ballast Masses . . . 4
  - 3.2.3 Nose Cone/ Payload Bay Length . . . 4
- 3.3 As-Built Launch Vehicle Overview . . . 4
  - 3.3.1 Separation Points and Location of Energetics . . . 5
  - 3.3.2 Nose Cone/ Payload Bay . . . 5
    - Forward Ballast System . . . 6
  - 3.3.3 Nose Cone/ Payload Bay Bulkheads . . . 7
  - 3.3.4 Main Parachute Bay . . . 8
  - 3.3.5 Avionics/ Air Brakes Bay (AVAB) . . . 9
  - 3.3.6 AVAB Bulkheads . . . 9
  - 3.3.7 Drogue Parachute Bay/ Fin Can . . . 10
  - 3.3.8 Removable Modular Fin System (RMFS) . . . 10
  - 3.3.9 Fins . . . 12
  - 3.3.10 Motor Mounting and Retention . . . 12
  - 3.3.11 As-Built Mass Analysis . . . 13
- 3.4 Launch Vehicle Flight Reliability . . . 14
  - 3.4.1 Structural Elements . . . 14
    - Airframe . . . 14
    - Fins . . . 14
    - Bulkheads . . . 14
    - Bulkhead Assembly Hardware . . . 15
  - 3.4.2 Electrical Elements . . . 15
    - Wiring . . . 15
    - Avionics Retention . . . 15
    - Battery Retention . . . 15
  - 3.4.3 Mission Success Criteria . . . 15
- 3.5 Launch Vehicle Manufacturing . . . 15
  - 3.5.1 Manufacturing Safety and Requirements . . . 15
  - 3.5.2 Airframe/ Coupler Cutting . . . 15

3.5.3 Nose Cone/ Payload Bay Construction . . . 16
Bulkhead Fabrication . . . 16
Coupler Assembly Bonding . . . 16
Hole Drilling and Camera Installation . . . 16
Forward Ballast System . . . 17
3.5.4 Main Parachute Bay Construction . . . 17
3.5.5 AVAB Construction . . . 18
Bulkhead Fabrication . . . 18
Coupler and Switch Band Fabrication . . . 18
3.5.6 Drogue Parachute Bay/ Fin Can Construction . . . 19
3.5.7 Fin Construction . . . 20
3.5.8 RMFS Component Construction . . . 21
Centering Bulkheads Construction . . . 21
Fin Runner Construction . . . 21
L-bracket Manufacturing . . . 22
Thrust Plate Construction . . . 22
Motor Retainer Construction . . . 22
3.5.9 RMFS Assembly . . . 23
3.5.10 Test Article Construction . . . 24
3.6 Recovery Subsystem . . . 25
3.6.1 Recovery System CONOPS . . . 26
3.6.2 Parachutes . . . 27
Parachute Opening Shock Calculations . . . 27
Main Parachute Deployment Configuration . . . 28
3.6.3 Shock Cord . . . 29
3.6.4 Structural Components . . . 29
3.6.5 Ejection Charges . . . 30
3.6.6 Avionics . . . 31
Altimeters . . . 32
Altimeter Arming Method . . . 32
Trackers . . . 32
Electrical Schematics . . . 32
Connectors . . . 33
Avionics Sensitivity to Electromagnetic Fields . . . 34
3.7 Mission Performance Predictions . . . 34
3.7.1 Launch Day Target Altitude . . . 34
Altitude Verification . . . 34
3.7.2 Air Brake Impact on Mission Performance . . . 35
3.7.3 Flight Profile Simulations . . . 36
Component Weights . . . 38
Simulated Motor Thrust Curve . . . 38
3.7.4 Stability Margin . . . 38
Verification of Center of Pressure, Center of Gravity, and Stability . . . 40
3.7.5 Ballast Placement . . . 41
3.7.6 Kinetic Energy at Landing . . . 41
3.7.7 Descent Time . . . 42
3.7.8 Drift Distance . . . 42

4 Payload Criteria 44
4.1 Payload Mission Statement and Success Criteria . . . 44
4.1.1 Mission Statement . . . 44
4.1.2 Success Criteria . . . 44
4.2 Payload Design Changes Since CDR . . . 44
4.2.1 Structural Changes . . . 44
4.2.2 Electronics Changes . . . 44
4.3 Payload Design Overview . . . 45
4.3.1 Payload Mission Design . . . 45

Flight CONOPS . . . 45
System CONOPS . . . 46
APRS Transmission Format . . . 47
4.3.2 Payload Structural Design . . . 47
Structural Components . . . 47
STEMCRaFT Assembly . . . 48
Payload Retention and Integration . . . 49
4.3.3 Payload Electronics Design . . . 50
WARHEAD . . . 50
FUSE Data Collection Subsystem . . . 51
SWITCH Transmission Subsystem . . . 53
CHARGE Power Supply Subsystem . . . 53
TORCH Ground Station . . . 54
4.3.4 On-Board Camera . . . 55
4.4 Payload Flight Reliability & Testing . . . 56
4.4.1 Overview . . . 56
4.4.2 Hardware Reliability . . . 56
4.4.3 Flight Behavior . . . 56
4.4.4 Data Collection . . . 56
4.4.5 Transmission Viability . . . 56
4.4.6 Remote Override Capabilities . . . 57
4.5 Payload Manufacturing . . . 57
4.5.1 Payload Structural Manufacturing . . . 57
STEMnaut Housing . . . 57
Pull-Pin Switches . . . 58
Electronics Mounting . . . 58
Battery Fastening . . . 58
Wiring/Connection Retention . . . 59
4.5.2 Payload Electronics Manufacturing . . . 59
As-Wired WARHEAD Schematic . . . 59
Data Collection PCB . . . 61
Voltage Regulator . . . 62
Voltage Drop Schematic . . . 62
MOSFET Switch . . . 63
SA858 Transmission Schematic . . . 64
Pull-Pin Schematics . . . 65
4.5.3 Manufactured Payload vs. Theoretical Payload . . . 66
Significant Dimensional Differences . . . 66
Significant Mass Differences . . . 67
4.6 System Operations . . . 67
4.7 Payload Demonstration Flight . . . 68
4.8 Payload Additional Flight . . . 68

5 Air Brakes **69**
5.1 Air Brakes Mission Statement and Success Criteria . . . 69
5.1.1 Mission Statement . . . 69
5.1.2 Success Criteria . . . 69
5.2 Air Brakes Changes Since CDR . . . 69
5.3 Air Brakes Design Overview . . . 70
5.3.1 Structural Elements . . . 70
5.3.2 Electrical Elements . . . 71
5.4 Air Brakes Flight Reliability . . . 71
5.5 Air Brakes Manufacturing . . . 71
5.6 System Operations . . . 73
5.7 Air Brakes Integration . . . 75

6 Demonstration Flights **77**

6.1 Demonstration Flight Overview . . . 77
6.1.1 Launch Conditions . . . 77
Launch Pad Information . . . 77
6.1.2 Motor Selection . . . 77
6.1.3 Ballast . . . 77
6.1.4 Static Stability . . . 77
6.1.5 Payload . . . 77
6.1.6 Air Brakes . . . 77
6.2 Vehicle Demonstration Flight . . . 77
6.2.1 Altitude Prediction . . . 77
Altitude Prediction Discrepancies . . . 77
6.2.2 Flight Profile Data . . . 78
6.2.3 Recovery System . . . 79
Landing Configuration . . . 79
6.2.4 Air Brakes System . . . 80
6.2.5 Flight Analysis . . . 82
Successful Systems . . . 82
System Failures . . . 82
Predicted vs Actual Flight Data . . . 82
Off-nominal Events . . . 83
6.2.6 Estimated Drag Coefficient . . . 84
Post Flight Simulation . . . 85
6.2.7 Subscale Comparison . . . 86
6.2.8 Lessons Learned . . . 86
6.2.9 Plan of Action . . . 86
6.3 Payload Demonstration Flight . . . 86
6.3.1 Retention System Analysis . . . 86
Successful Systems . . . 86
System Failures . . . 86
Lessons Learned . . . 87
Plan of Action . . . 87
6.3.2 Payload Mission Sequence . . . 87
Successful Systems . . . 87
System Failures . . . 88
Lessons Learned . . . 88
Plan of Action . . . 88

7 Safety **89**
7.1 Safety Officer . . . 89
7.2 Launch Procedures/ Checklist . . . 89
7.3 Safety Documentation Methods . . . 113
7.4 Personnel Hazard Analysis . . . 114
7.4.1 Hazards to Personnel . . . 114
7.4.2 Project Schedule Analysis . . . 120
7.4.3 Personnel Availability Analysis . . . 121
7.5 Failure Modes and Effects Analysis . . . 122
7.5.1 Launch Vehicle FMEA . . . 122
7.5.2 Payload FMEA . . . 127
7.5.3 Integration FMEA . . . 130
7.5.4 Launch Support Equipment FMEA . . . 131
7.5.5 Launch Operations FMEA . . . 131
7.5.6 Environmental Hazard Analysis . . . 132
7.6 Project Risks FMEA . . . 137
7.7 Fault Tree Analysis . . . 142
7.7.1 Vehicle Fault Tree Analysis . . . 142
7.7.2 Recovery Fault Tree Analysis . . . 143
7.7.3 Payload Fault Tree Analysis . . . 144

7.7.4 Air Brakes Fault Tree Analysis . . . 145

8 Project Plan **145**
8.1 Launch Vehicle Testing Suite . . . 145
8.1.1 Subscale Ejection Test . . . 146
Controllable Variables . . . 146
Required Facilities, Equipment, Tools, and Software . . . 146
Methodology . . . 146
Results . . . 147
8.1.2 Subscale Dry Run . . . 147
Controllable Variables . . . 147
Required Facilities, Equipment, Tools, and Software . . . 147
Methodology . . . 147
Results . . . 147
8.1.3 Subscale Demonstration Flight . . . 148
Controllable Variables . . . 148
Required Facilities, Equipment, Tools, and Software . . . 148
Methodology . . . 148
Results . . . 149
8.1.4 Moment of Inertia Test . . . 150
Controllable Variables . . . 150
Required Facilities, Equipment, Tools, and Software . . . 150
Methodology . . . 150
Results . . . 150
8.1.5 Nose Cone Bulkhead Tensile Test . . . 151
Controllable Variables . . . 151
Required Facilities, Equipment, Tools, and Software . . . 151
Methodology . . . 152
Results . . . 152
8.1.6 AVAB Bay Tensile Test . . . 152
Controllable Variables . . . 153
Required Facilities, Equipment, Tools, and Software . . . 153
Methodology . . . 153
Results . . . 153
8.1.7 Rivet Shear Loading Test . . . 154
Controllable Variables . . . 154
Required Facilities, Equipment, Tools, and Software . . . 154
Methodology . . . 155
Results . . . 155
8.1.8 Shear Pin Shear Loading Test . . . 155
Controllable Variables . . . 155
Required Facilities, Equipment, Tools, and Software . . . 156
Methodology . . . 156
Results . . . 156
8.1.9 Fin Can Impact Test . . . 156
Controllable Variables . . . 157
Required Facilities, Equipment, Tools, and Software . . . 157
Methodology . . . 157
Results . . . 157
8.1.10 Altimeter Test . . . 158
Controllable Variables . . . 158
Required Facilities, Equipment, Tools, and Software . . . 158
Methodology . . . 159
Results . . . 159
8.1.11 GPS Test . . . 160
Controllable Variables . . . 160
Required Facilities, Equipment, Tools, and Software . . . 160

Methodology . . . 160
Results . . . 161
8.1.12 Parachute Deployment Verification Test . . . 161
Controllable Variables . . . 161
Required Facilities, Equipment, Tools, and Software . . . 161
Methodology . . . 162
Results . . . 162
8.1.13 Full-scale Ejection Test . . . 163
Controllable Variables . . . 163
Required Facilities, Equipment, Tools, and Software . . . 163
Methodology . . . 163
Results . . . 164
8.1.14 Full-scale Dry Run . . . 164
Controllable Variables . . . 165
Required Facilities, Equipment, Tools, and Software . . . 165
Methodology . . . 165
Results . . . 165
8.1.15 Full-scale Demonstration Flight . . . 165
Controllable Variables . . . 166
Required Facilities, Equipment, Tools, and Software . . . 166
Methodology . . . 166
Results . . . 166
8.2 Payload Testing Suite . . . 166
8.2.1 WARHEAD Data Collection Flight Test . . . 167
Controllable Variables . . . 167
Required Facilities, Equipment, Tools, and Software . . . 167
Methodology . . . 167
Results . . . 168
8.2.2 WARHEAD Simulated Flight Transmission Test . . . 169
Controllable Variables . . . 169
Required Facilities, Equipment, Tools, and Software . . . 169
Methodology . . . 169
Results . . . 170
8.2.3 WARHEAD Remote Override Test . . . 170
Controllable Variables . . . 171
Required Facilities, Equipment, Tools, and Software . . . 171
Methodology . . . 171
Results . . . 171
8.2.4 WARHEAD Data Transmission Verification . . . 172
Controllable Variables . . . 172
Required Facilities, Equipment, Tools, and Software . . . 172
Methodology . . . 173
Results . . . 173
8.2.5 WARHEAD Power Supply Verification Test . . . 173
Controllable Variables . . . 173
Required Facilities, Equipment, Tools, and Software . . . 173
Methodology . . . 174
Results . . . 174
8.2.6 WARHEAD Transmission Range Test . . . 174
Controllable Variables . . . 175
Required Facilities, Equipment, Tools, and Software . . . 175
Methodology . . . 175
Results . . . 176
8.2.7 WARHEAD Antenna Polarization Test . . . 176
Controllable Variables . . . 176
Required Facilities, Equipment, Tools, and Software . . . 176

Methodology . . . 177
Results . . . 177
8.2.8 WARHEAD FUSE Data Collection Rate Test . . . 177
Controllable Variables . . . 178
Required Facilities, Equipment, Tools, and Software . . . 178
Methodology . . . 178
Results . . . 178
8.2.9 WARHEAD Remote Override Range Test . . . 178
Controllable Variables . . . 179
Required Facilities, Equipment, Tools, and Software . . . 179
Methodology . . . 179
Results . . . 179
8.2.10 WARHEAD Vacuum Chamber Test . . . 180
Controllable Variables . . . 180
Required Facilities, Equipment, Tools, and Software . . . 180
Methodology . . . 181
Results . . . 181
8.2.11 Nose Cone with STEMCRaFT Impact Test . . . 182
Controllable Variables . . . 182
Required Facilities, Equipment, Tools, and Software . . . 182
Methodology . . . 182
Results . . . 183
8.2.12 Camera Logging Endurance Test . . . 183
Controllable Variables . . . 183
Required Facilities, Equipment, Tools, and Software . . . 183
Methodology . . . 184
Results . . . 184
8.2.13 Air Brakes Deployment Test . . . 184
Controllable Variables . . . 184
Required Facilities, Equipment, Tools, and Software . . . 184
Methodology . . . 184
Results . . . 185
8.2.14 Air Brakes Flight Simulation Test . . . 185
Controllable Variables . . . 186
Required Facilities, Equipment, Tools, and Software . . . 186
Methodology . . . 187
Results . . . 187
8.2.15 Air Brakes Effectiveness Flight Test . . . 187
Controllable Variables . . . 187
Required Facilities, Equipment, Tools, and Software . . . 187
Methodology . . . 187
Results . . . 187
8.2.16 Air Brakes Battery Life Test. . . . 188
Controllable Variables . . . 189
Required Facilities, Equipment, Tools, and Software . . . 189
Methodology . . . 189
Results . . . 189
8.2.17 Lessons Learned From Testing . . . 189
8.3 Requirements Compliance . . . 190
8.3.1 Competition Requirements . . . 191
8.3.2 Team Derived Requirements . . . 213
8.4 Budget . . . 240
8.4.1 Funding Plan . . . 242
8.5 Project Timelines . . . 243
8.5.1 Competition Deliverables . . . 243
8.5.2 Competition Development Timelines . . . 244

Competition Development PERT Charts . . . 246
Project Management Timeline . . . 246
8.5.3 Verification Testing Timeline . . . 249
8.5.4 Funding Timeline . . . 249

9 Appendices **A.1**
9.1 Additional Full-Scale Information . . . A.1
9.1.1 2/22/2025 Flight Launch Day Checklist . . . A.1
9.1.2 3/8/2025 VDF/PDF Flight Launch Day Checklist . . . A.1
9.2 Additional Subscale Information . . . A.1
9.3 Team / Club Documentation and Information . . . A.1
9.3.1 Social Media Accounts . . . A.1
9.4 Safety and Training Materials . . . A.2
9.5 Technical Datasheets . . . A.2
9.6 Mental Health and Support Resources . . . A.2

List of Tables

2.1 Changes made to vehicle criteria since CDR submission. . . . 2
2.2 Changes made to payload criteria since CDR submission. . . . 2
2.3 Changes made to project plan since CDR submission. . . . 2
3.1 Vehicle Success Criteria . . . 3
3.2 Estimated to As-Built Section Mass Comparison. . . . 13
3.3 As-Built Section Mass Breakdown . . . 14
3.4 Ejection Charge Sizing . . . 31
3.5 Apogee Prediction Across Software Suites . . . 34
3.6 Apogee Calculation Constants and Results . . . 35
3.7 Apogee Prediction at Different Wind Speeds (RocketPy) . . . 36
3.8 Predicted Component Weights . . . 38
3.9 Motor Specifications . . . 38
3.10 Stability Margin Determination Across Software Suites . . . 38
3.11 Center of Gravity Location in Comparison to Air Brake Protuberances . . . 39
3.12 Stability Margin Constants and Results . . . 40
3.12 Stability Margin Constants and Results . . . 41
3.13 Kinetic Energy Calculations . . . 42
3.14 Wind Drift Distance . . . 42
3.15 RocketPy Wind Drift Distance . . . 43
4.1 Payload Success Criteria . . . 44
4.2 State Machine Parameters . . . 51
5.1 Air Brakes Success Criteria . . . 69
5.2 Mass Breakdown of Air Brakes Components . . . 76
6.1 VDF Descent Data Comparison . . . 80
7.1 FMEA LS Matrix . . . 113
7.2 FMEA Severity Key . . . 113
7.3 FMEA Likelihood Key . . . 113
7.4 Personnel Hazards . . . 114
7.5 Project Schedule Analysis . . . 120
7.6 Personnel Availability Analysis . . . 121
7.7 Risk Assessment Before Mitigation . . . 122
7.8 Risk Assessment After Mitigation . . . 122
7.9 Launch Vehicle Hazards . . . 122
7.10 Payload Hazards . . . 127
7.11 Integration Hazards . . . 130
7.12 Launch Support Hazards . . . 131
7.13 Launch Day Operation Hazards . . . 131
7.14 Environmental Hazards . . . 133
7.15 Project Risks . . . 137
8.1 Launch Vehicle Tests . . . 145
8.2 Subscale ejection testing success criteria. . . . 146
8.3 Subscale dry run success criteria. . . . 147
8.4 Subscale Demonstration Flight success criteria. . . . 148
8.5 Moment of inertia success criteria. . . . 150
8.6 Nose Cone Bulkhead tensile test success criteria. . . . 151
8.7 AVAB Bay tensile test success criteria. . . . 153
8.8 Rivet shear loading test success criteria. . . . 154
8.9 Shear pin shear load test success criteria. . . . 155
8.10 Fin Can impact test success criteria. . . . 157
8.11 Altimeter Test Success Criteria . . . 158
8.12 GPS Test Success Criteria . . . 160
8.13 GPS Test Results . . . 161
8.14 Parachute Deployment Test Success Criteria . . . 161
8.15 Full-scale ejection testing success criteria. . . . 163

8.16 Full-scale dry run success criteria. . . . 165
8.17 Full-scale Demonstration Flight success criteria. . . . 165
8.17 Full-scale Demonstration Flight success criteria. . . . 166
8.18 Payload Tests . . . 166
8.19 WARHEAD Data Collection Flight Test success criteria. . . . 167
8.20 WARHEAD flight simulation transmission test success criteria. . . . 169
8.21 WARHEAD Remote Override Test success criteria. . . . 171
8.22 WARHEAD Data Transmission Verification success criteria. . . . 172
8.23 WARHEAD Power Supply Verification Test success criteria. . . . 173
8.24 WARHEAD Transmission Range Test success criteria. . . . 175
8.25 WARHEAD Antenna Polarization Test success criteria. . . . 176
8.26 WARHEAD FUSE Data Collection Rate Test success criteria. . . . 177
8.27 WARHEAD Remote Override Range Test success criteria . . . 179
8.28 WARHEAD Vacuum Chamber Test success criteria . . . 180
8.29 Nose Cone impact test success criteria. . . . 182
8.30 Camera logging endurance test success criteria. . . . 183
8.31 Air Brakes deployment test success criteria success criteria. . . . 184
8.32 Air Brakes flight simulation test success criteria. . . . 186
8.33 Air Brakes effectiveness flight test success criteria. . . . 187
8.34 Battery Endurance Flight Test Success Criteria. . . . 189
8.35 NASA Requirements Completion Status . . . 190
8.36 Team-Derived Requirements Completion Status . . . 190
8.37 2024-2025 General Requirements . . . 191
8.38 NASA 2024-2025 Vehicle Requirements . . . 194
8.39 NASA 2024-2025 Recovery Requirements . . . 205
8.40 NASA 2024-2025 Payload Requirements . . . 209
8.41 2024-2025 Safety Requirements . . . 212
8.42 2024-2025 Team-Derived Structures Requirements . . . 213
8.43 2024-2025 Team-Derived Recovery Requirements . . . 221
8.44 2024-2025 Team-Derived Air Brake Requirements . . . 230
8.45 2024-2025 Team-Derived Air Brake Requirements . . . 238
8.46 2024-2025 NASA Student Launch Competition Budget . . . 240
8.47 Projected Funding Sources . . . 243
8.48 Competition Deadlines . . . 243
8.48 Competition Deadlines . . . 244
8.49 Weekly Club Schedule . . . 245
8.50 2024-2025 Project Management Timeline . . . 247

List of Figures

3.1 Camera housing placement on the Nose Cone/ Payload Bay. . . . 4
3.2 Camera and housing detail view. . . . 4
3.3 As-built Launch Vehicle overall dimensions (in.) . . . 4
3.4 Completed, fully integrated Launch Vehicle suspended during MOI testing with Air Brakes extended. . . . 5
3.5 Launch vehicle section separation points and energetics location (in.) . . . 5
3.6 Nose Cone/ Payload Bay external length. . . . 6
3.7 Nose Cone external length detail. . . . 6
3.8 Nose Cone/ Payload Bay coupler overall length. . . . 6
3.9 Nose Cone/ Payload Bay coupler effective shoulder length. . . . 6
3.10 As-built Nose Cone/ Payload Bay overall dimensions (in.) . . . 6
3.11 Forward ballast system and aluminum tip uninstalled from the Nose Cone, configured with the maximum allowable ballast mass (3.7 lbs). . . . 7
3.12 Projected required forward ballast mass (0.46 lbs.) . . . 7
3.13 Permanent ring bulkhead with pair of 1/4 in. threaded rods. . . . 7
3.14 Aft removable bulkhead and STEMCRaFT capsule interface. . . . 7
3.15 As-built Nose Cone/ Payload Bay ring bulkhead dimensions (in.) . . . 8
3.16 As-built Nose Cone/ Payload Bay removable bulkhead dimensions (in.) . . . 8
3.17 Main Parachute Bay overall length. . . . 8
3.18 Main Parachute Bay diameter. . . . 8
3.19 As-built Main Parachute Bay dimensions (in.) . . . 8
3.20 AVAB overall length (note: reversed orientation from drawing). . . . 9
3.21 AVAB switch band length. . . . 9
3.22 As-built AVAB dimensions (in.) . . . 9
3.23 As-built AVAB bulkhead dimensions (in.) . . . 9
3.24 Drogue Parachute Bay/ Fin Can airframe length. . . . 10
3.25 As-built Drogue Parachute Bay/ Fin Can dimensions (in.) . . . 10
3.26 RMFS with installed fins and AeroTech RMS 75-3840 motor casing. . . . 10
3.27 RMFS internal structure length. . . . 11
3.28 As-built RMFS overall dimensions (in.) . . . 11
3.29 As-built RMFS centering bulkhead dimensions (in.) . . . 11
3.30 As-built RMFS thrust plate dimensions (in.) . . . 11
3.31 As-built RMFS fin runner dimensions (in.) . . . 11
3.32 As-built RMFS L-bracket dimensions (in.) . . . 11
3.33 Fin semi-span length. . . . 12
3.34 Fin root and tip chord length. . . . 12
3.35 Fin sweep angle measured at leading edge. . . . 12
3.36 As-built fin dimensions (in.) . . . 12
3.37 Motor retainer installation demo with AeroTech RMS-75/3840 motor casing. . . . 13
3.38 As-built motor retainer dimensions (in.) . . . 13
3.39 Uncut body tube in the lathe. . . . 15
3.40 Nose Cone bulkhead milling using a ShopBot CNC router. . . . 16
3.41 Bonding the ring bulkhead to the coupler tube. . . . 16
3.42 Coupler assembly curing under compression. . . . 16
3.43 Bonding the coupler assembly into the Nose Cone body. . . . 16
3.44 Drilling a pressure port hole in the Nose Cone body. . . . 17
3.45 Camera housing fastener holes and slot for the ribbon cable. . . . 17
3.46 Drilling a shear pin hole through the Main Parachute Bay and Nose Cone coupler. . . . 17
3.47 CNC milling the AVAB bulkheads. . . . 18
3.48 Finished AVAB bulkhead. . . . 18
3.49 Verification of switch band positioning prior to AVAB assembly curing. . . . 18
3.50 Marking the Air Brake mechanism fastener hole and fin slots using a 3D printed guide. . . . 19
3.51 Cutting the air brake slots using a Dremel with diamond cutting wheel. . . . 19
3.52 RMFS interface marking with a 3D printed marking guide. . . . 19
3.53 RMFS interface marking and verification using back lit RMFS assembly. . . . 19

3.54 Cutting the RMFS fin slots. . . . 20
3.55 End cut RMFS fin slot. . . . 20
3.56 Tracing the fins onto G10 sheets using the 3D printed template. . . . 20
3.57 Cutting the fin shape with a tile saw. . . . 20
3.58 Sanding the fins to final dimension with a belt sander. . . . 21
3.59 Drilling fastener holes through the fin tabs. . . . 21
3.60 CNC milling the RMFS centering bulkheads. . . . 21
3.61 Drilling the centering ring bulkhead fastener holes to final diameters. . . . 21
3.62 Rough cut bar stock. . . . 22
3.63 Side milling the fin runners. . . . 22
3.64 Finished fin runners. . . . 22
3.65 Finished L-brackets. . . . 22
3.66 Tapping #8-32 threads into the thrust plate. . . . 23
3.67 Finished motor retainer plate. . . . 23
3.68 Fully disassembled RMFS, minus fins. . . . 23
3.69 Partially exploded view of RMFS component attachment schemes. . . . 24
3.70 RMFS fastener connection detail. . . . 24
3.71 Nose Cone bulkhead assembly test article sections before bonding. . . . 24
3.72 Finished Nose Cone assembly test article. . . . 24
3.73 Finished AVAB bulkhead assembly test article. . . . 24
3.74 Shear plate implement for testing nylon rivets. . . . 25
3.75 Modified shear plate implement for testing shear pins. . . . 25
3.76 Assembled Fin Can drop testing article. . . . 25
3.77 Recovery CONOPS 26
3.78 Drogue Deployment Configuration 27
3.79 Main Parachute Deployment Configuration 28
3.80 Main Deployment Configuration 29
3.81 Shock Cord Attachment System 30
3.82 Full AVAB Assembly 31
3.83 AV Sled 31
3.84 Primary Altimeter Wiring Diagram 32
3.85 Secondary Altimeter Wiring Diagram 33
3.86 AVAB Bulkhead Top View 33
3.87 AVAB Bulkhead Side View 33
3.88 Flight Profile, Air Brakes Impact 35
3.89 Flight Profile, Open Rocket 36
3.90 Flight Profile, RASAero II 37
3.91 Flight Profile, RocketPy 37
3.92 Simulated Motor Thrust Curves 38
3.93 Launch Vehicle, Open Rocket 39
3.94 Launch Vehicle, RASAero II 39
3.95 Launch Vehicle, RocketPy 39
3.96 Center of Gravity During Flight 40
3.97 RocketPy Drift Distance During Flight (0 mph Winds) 43
4.1 STEMCRaFT Mission CONOPS 45
4.2 WARHEAD Onboard Systems CONOPS 46
4.3 APRS packet as received using Direwolf. . . . 47
4.4 STEMCRaFT structural components. . . . 47
4.5 Comparison of STEMCRaFT with and without the capsule shell. . . . 48
4.6 Ventilation fan on top STEMCRaFT bulkhead. . . . 48
4.7 STEMCRaFT retention system. . . . 49
4.8 STEMCRaFT integration into the Nose Cone. . . . 49
4.9 WARHEAD functional block diagram. . . . 50
4.10 FUSE block diagram. . . . 51
4.11 FUSE dimensions and wiring schematic. . . . 52
4.12 SWITCH block diagram. . . . 53

4.13 CHARGE battery diagram. . . . 54
4.14 TORCH ground station. . . . 55
4.15 Overview of camera-related hardware components. . . . 55
4.16 Payload bulkheads being 3D printed. . . . 57
4.17 STEMnaut housing on the bottom bulkhead. . . . 57
4.18 Double pull-pin switch on STEMCRaFT sled. . . . 58
4.19 Images of the STEMCRaFT electronics mounting methods. . . . 58
4.20 Batteries retained using Velcro retention system. . . . 59
4.21 Soldering and cable management on the sled. . . . 59
4.22 Full as-wired WARHEAD schematic. . . . 60
(a) As wired dual pull-pin schematic. . . . 60
(b) Dual pull-pin located on WARHEAD. . . . 60
4.23 Layout of FUSE PCB. . . . 61
4.24 FUSE PCB images. . . . 61
4.25 LM2596 schematic and implementation. . . . 62
4.26 As-wired voltage divider circuit. . . . 63
4.27 MOSFET schematic and its physical location on WARHEAD. . . . 64
4.28 SA858 transmitter schematic and implementation. . . . 65
4.29 Dual pull-pin schematic and implementation. . . . 65
4.30 Top and bottom bulkhead dimension drawings. . . . 66
4.31 Dimension drawings for capsule shell, sled, and STEMCRaFT. . . . 66
4.32 Measured STEMCRaFT height. . . . 67
5.1 Fully assembled Air Brakes mechanism. . . . 70
5.2 Air Brakes electrical schematic. . . . 71
5.3 Washer/Bearing assembly. . . . 72
5.4 3D printed components. . . . 72
5.5 Top view of Staggered Actuation Mechanism. . . . 72
5.6 Top of servo sled. . . . 72
5.7 Bottom of servo sled. . . . 72
5.8 Long spacers next to a short spacer. . . . 73
5.9 Raspberry Pi sled. . . . 73
5.10 Bottom of IMU sled. . . . 73
5.11 Top of IMU sled. . . . 73
5.12 Curve fit of the apogee prediction. . . . 74
5.13 Diagram of control logic. . . . 74
5.14 Finite State Machine logic. . . . 75
5.15 Air Brakes housing next to Switchband. . . . 76
6.1 StratologgerCF flight profile graph during VDF . . . 78
6.2 EasyMini flight profile data graph during VDF . . . 78
6.3 VDF descent phases. . . . 79
6.4 VDF landing orientation. . . . 79
6.5 Second VDF attempt. . . . 80
6.6 Altitude and WHJ predicted apogee vs time. . . . 81
6.7 Vertical acceleration and Fin deployment vs Time. . . . 81
6.8 CD vs Mach. . . . 82
6.9 VDF Flight Profile Comparison . . . 83
6.10 VDF Flight Profile Comparison with Air Brake Deployment . . . 83
6.11 Pitch of rocket vs time. . . . 84
6.12 Vehicle Drag Coefficient Comparison . . . 84
6.13 Vehicle Drag Coefficient Comparison- Air Brakes Deployed . . . 85
6.14 Post Flight Simulation Comparison . . . 85
6.15 STEMCRaFT Retention System During PDF Recovery. . . . 86
6.16 Post-recovery capsule inspection and data analysis. . . . 87
6.17 State changes over time graph. . . . 88
7.1 Structures FTA. . . . 142
7.2 Recovery FTA. . . . 143

7.3 Payload FTA. . . . 144
7.4 Air Brakes FTA. . . . 145
8.1 Center of gravity test to verify burnout CG position for the Subscale Launch Vehicle. . . . 148
8.2 Subscale launch during Subscale Demonstration Flight . . . 149
8.3 Subscale Nose Cone (left) and AVAB/ Main Parachute Bay (right) Landing Configuration . . . 149
8.4 Launch Vehicle on MOI Swing . . . 151
8.5 Nose Cone bulkhead assembly test article under maximum tested loading. . . . 152
8.6 AVAB bulkhead assembly test article under maximum tested loading. . . . 154
8.7 Nylon rivet fastener secured into shear plate assembly. . . . 155
8.8 Shear pin test experimental setup. . . . 156
8.9 Experimental setup and results of the drop test. . . . 158
8.10 Comparison of altimeter test plots for Stratologger and EasyMini. . . . 159
(c) Main Parachute Deployment Test . . . 163
(d) Drogue Parachute Deployment Test . . . 163
8.11 Parachute ejection tests: drogue and main separation. . . . 164
8.12 Full-scale burn-out center of gravity test. . . . 165
8.13 WARHEAD recovery and prototype images from the data collection flight. . . . 168
8.14 WARHEAD Data Collection Flight logs. . . . 169
8.15 Simulated Flight transmission UI output. . . . 170
8.16 Experimental setup and XCTU software configuration for simulated flight transmission testing. . . . 172
8.17 Decoded APRS data received by ground station. . . . 173
8.18 Power Supply Verification Test and Battery level recording after 3 hours. . . . 174
8.19 Final transmission distance. . . . 176
8.20 APRS signal received at ground station. . . . 176
8.21 Terminal output during data packet frequency program. . . . 178
8.22 WARHEAD Remote Override experimental setup. . . . 180
(a) TORCH experimental setup. . . . 180
(b) WARHEAD experimental setup. . . . 180
8.23 WARHEAD Remote Override GPS distance. . . . 180
8.24 WARHEAD Vacuum Chamber Test experimental setup. . . . 181
(a) WARHEAD experimental setup. . . . 181
(b) Vacuum Chamber gauge and valve. . . . 181
8.25 Vacuum Chamber APRS transmission received by ground station. . . . 181
8.26 Nose Cone with STEMCRaFT drop test images. . . . 183
(a) Nose Cone suspended before being dropped. . . . 183
(b) Code showing electronics still operational after Nose Cone drop test. . . . 183
8.27 Airbrakes deployment test images. . . . 185
(a) Air Brakes mechanism during the deployment test. . . . 185
(b) Weight used for the Air Brakes deployment test. . . . 185
8.28 Image of example flight data. . . . 186
8.29 Display of the simulated flight code running. . . . 186
8.30 Altitude & Prediction v.s. Time. . . . 188
8.31 Acceleration and Encoder position vs time. . . . 188
8.32 Cd vs Mach Number . . . 188
8.33 2024-2025 Budget Breakdown. . . . 242
8.34 2024-2025 Funding Breakdown. . . . 243
8.35 SL Competition Gantt chart. . . . 244
8.36 SL Development Gantt chart. . . . 245
8.37 Full-scale Launch Vehicle PERT chart. . . . 246
8.38 Payload PERT chart. . . . 246
8.39 SL testing Gantt chart. . . . 249
8.40 SL Budget Gantt chart. . . . 249

1 Summary of Report

1.1 Team Summary

1.1.1 Team Name and Mailing Address

Name: High-Powered Rocketry Club at NC State, Tacho Lycos

Mailing Address: 1840 Entrepreneur Drive, Raleigh, NC 27606

Primary Contact: Katelyn Yount, kvyount@ncsu.edu, (980) 258 - 2628

1.1.2 Final Launch Location

The North Carolina State University team will conduct their competition launch in Huntsville, Alabama, during launch week.

1.1.3 Team Mentor and Advisor

Name	Title	Email	Phone	TRA Certification	Flyer #
Jim Livingston	Mentor	livingston@ec.rr.com	(910)612-5858	Level 3	02204
Felix Ewere	Faculty Advisor	feewere@ncsu.edu	(919)515-8381	N/A	N/A

1.1.4 Time Spent on FRR Milestone

The Senior Design Team dedicated approximately 2112 hours to completing the FRR milestone.

1.2 Launch Vehicle Summary

1.2.1 Vehicle Size and Mass

The Launch Vehicle has an overall length of 93.75 in. with a maximum body diameter of 6.17 in. Individual external section lengths and wet masses are listed in the table below. The dry mass of the Launch Vehicle is 30.8 lbs without ballast and 31.3 lbs with ballast. The wet mass is 39.7 lbs. The Launch Vehicle burnout mass and total landing mass is 35.6 lbs.

Section	Length	Mass
Nose Cone/Payload Bay	25 in.	7.9 lbs.
Main Parachute Bay	30.5 in.	5.9 lbs.
Avionics and Air Brakes Bay	3 in.	7.6 lbs.
Drogue Parachute Bay/Fin Can	35.25 in.	18.3 lbs.

1.2.2 Motor Selection

The primary motor choice is the AeroTech L1520T. This motor will be flown during the competition launch in Huntsville, Alabama.

1.2.3 Official Target Altitude

The official target altitude for the competition is 4600 ft.

1.2.4 Recovery System

The recovery system uses a dual deploy system with a Perfect Flite StratologgerCF primary altimeter and an Altus Metrum EasyMini secondary altimeter. The GPS tracker for the Launch Vehicle is an Eggfinder Mini. The drogue parachute is a Fruity Chutes 15” Classic Elliptical parachute that deploys at apogee, and the main parachute is a Fruity Chutes Iris Ultra 96” Compact parachute that deploys at 550 ft. The drogue parachute will be protected with a Nomex blanket and the main parachute will utilize a deployment bag.

1.2.5 Rail Size

The Launch Vehicle will use a 1515 launch rail that is 12 ft. long for the competition launch.

1.3 Payload Summary

The WARHEAD is a STEMCRaFT capsule located in the Nose Cone of the Launch Vehicle. The WARHEAD will contain four STEMnauts and electronics that will record and transmit data over the 2M band in the APRS packed format. The payload will collect data for all eight data points listed in NASA Requirement 4.2.1, which will be processed upon landing. The data will then be encoded and transmitted on the 144.390 MHz frequency as an APRS packet within the 2-meter band provided by NASA. The Launch Vehicle also contains an Air Brakes system that will be actively controlled after motor burnout to adjust the vehicle’s ascent trajectory and reach the target altitude.

2 Changes Made Since CDR

2.1 Changes Made to Vehicle Criteria

Table 2.1: Changes made to vehicle criteria since CDR submission.

Change Description	Justification	Affected Subsystem(s)
Added aft-facing camera housing onto exterior of the Nose Cone/ Payload Bay	External mounting for STEMCRaFT camera to verify vehicle and Air Brakes performance during flight	Structures, Aerodynamics, Payload
Forward ballast mass material changed from resin to aluminum discs	More economical, space efficient, and durable material	Structures
Drogue parachute switched from a 18 in. Fruity Chutes Elliptical Parachute to a Fruity Chutes 15 in. Classic Elliptical Parachute	Parachute availability	Recovery
2 ft. section of shock cord added to the Main Parachute Bay (separate from Main Parachute shock cord)	Improved deployment bag retention	Recovery
Spacing between the AV Sled plates was reduced from 6 in. to 5.5 in	Required increased separation between altimeter boards and forward AVAB bulkhead fasteners	Recovery
Added 3D printed PLA spacers on threaded rods between AV sleds	Improved AV sled positioning and retention	Recovery

2.2 Changes Made to Payload Criteria

Table 2.2: Changes made to payload criteria since CDR submission.

Change Description	Justification	Affected Subsystem(s)
Implemented IRLB8721PBF MOSFET as a more reliable method of control for transmission toggle on/off	Improved reliability of transmission control circuit	Payload Electronics
Multiple indicator LEDs added at various points throughout wiring	Enhanced debugging and system status indication	Payload Electronics
Added Raspberry Pi camera mounted in small aft-facing housing located on the Nose Cone. Camera video logged on the WARHEAD Raspberry Pi	Enables onboard video recording for payload documentation	Payload Structural Integration, Payload Software
Replaced primary 2S 2200mAh battery with a 4S 2200mAh battery for extended battery life	Increased power availability for prolonged use	Payload Electronics
Lengthened primary electronics mounting board by 1.5 inches to accommodate new battery	Provided sufficient space for increased power capacity	Payload Structural Integration

2.3 Changes Made to Project Plan

Table 2.3: Changes made to project plan since CDR submission.

Change Description	Justification	Affected Subsystem(s)
VDF moved to March 8, 2025	Redesign of the recovery system after initial flight	Structures, Recovery, Aerodynamics, Project Management
PDF moved to March 8, 2025	To allow more time for payload development and testing	Payload, Project Management
Additional flight scheduled for March 29, 2025	For Air Brakes data collection on an unballasted full-scale flight. To test payload transmission prior to Huntsville.	Payload, Project Management
Scheduled FRR presentation for March 28, 2025	Required by NASA SL Handbook	All Subsystems

3 Vehicle Criteria

3.1 Launch Vehicle Mission Statement and Success Criteria

3.1.1 Mission Statement

The primary mission of the Launch Vehicle is to deliver the payload to the declared apogee and return it safely to the ground. A secondary objective of the Launch Vehicle is to carry the Air Brakes payload to improve accuracy in reaching the declared apogee. The overall design intent of the Launch Vehicle is to enable successful execution of the payload mission while being safe, reliable, and reusable. The criteria used to determine the level of mission success are listed in Table 3.1 below.

3.1.2 Success Criteria

Table 3.1: Vehicle Success Criteria

Success Level	Vehicle Criteria
Success	· Nominal powered flight and coast phase. · Nominal separation and deployment of recovery gear at intended altitudes. · Launch Vehicle achieves within 200 ft. of declared apogee. · Launch Vehicle lands within allotted time and recovery area. · No structural or electrical damage to Launch vehicle or payload. · All sections of Launch Vehicle are recovered successfully. · Launch Vehicle can be relaunched the same day.
Partial Success	· Nominal powered flight and coast phase. · Nominal separation and deployment of recovery gear at intended altitudes. · Launch vehicle achieves apogee within 4,000-6000 ft. · Launch vehicle sustains minor damage upon landing, is able to be repaired and re-flown in the same-day.
Partial Failure	· Nominal powered flight and coast phase. · Launch vehicle fails to achieve apogee within 4,000-6000 ft. · Partial deployment of recovery gear, recovery gear is tangled. · Launch vehicle or payload sustains damage that prevents same-day re-flight. · Launch vehicle lands outside of recovery area or in a manner that precludes successful recovery (tree, water, power line, etc.).
Failure	· Launch vehicle fails to exit launch rail. · Motor CATO. · Premature separation during powered flight or coast phase. · Launch vehicle fails to exceed 3,500 ft. altitude. · Non-separation during recovery events. · Any other mishap resulting in significant damage or total loss of Launch Vehicle or primary payload.

3.2 Launch Vehicle Design Changes Since CDR

The overall Launch Vehicle design remains highly similar to that specified at the CDR milestone. Two minor, intentional changes were implemented: A small, aft-facing external camera was installed on the Nose Cone/ Payload Bay, and the ballast system mass material was changed from resin to aluminum. Both of these changes were communicated to and approved by the NASA SL panel prior to implementation.

The only unintentional difference from the CDR design is the Nose Cone airframe body received from the vendor was 2 in. shorter than intended. All other section lengths were closely controlled during the manufacturing process, therefore this was the only difference that affected the overall vehicle dimensions. As a result, the final as-built Launch Vehicle overall length is 93.75 in., versus the original 95.75 in. specified at the CDR milestone.

3.2.1 STEMCRaFT Camera

The STEMCRaFT camera is a small, aft-facing external camera mounted on the Nose Cone. It has a 3D printed housing measuring 1.49 in. long, 0.47 in. wide, by 0.48 in. tall (approximately the size of one airfoiled rail button). It is fastened to the airframe using two M3 screws and embedded hex nuts within the housing body. This camera connects to the STEMCRaFT payload via a ribbon cable and is used to verify vehicle and Air Brakes operation during flight.

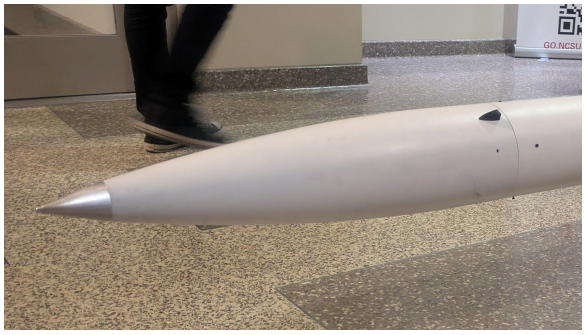

Figure 3.1: Camera housing placement on the Nose Cone/ Payload Bay.

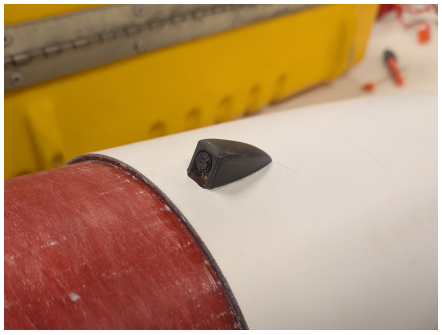

Figure 3.2: Camera and housing detail view.

3.2.2 Forward Ballast Masses

The forward ballast system mass material was changed from discs of cured epoxy resin to discs of 1/4 in. thick 6061 aluminum. Using aluminum was more economical, simplified fabrication, and resulted in more durable masses. Instead of casting resin into molds, the masses were designed in CAD then cut out of spare 1/4 in. 6061 aluminum sheet via a waterjet. The mass retention system and placement remains unchanged and is detailed in Section 3.3.2.

3.2.3 Nose Cone/ Payload Bay Length

The Nose Cone airframe body received from the vendor was exactly 2 in. shorter than anticipated. This is attributed to purchasing the Nose Cone body through a previously unused vendor for Nose Cones (Wildman Rocketry) and also a lack of exact length measurements available at purchasing. This discrepancy had no impact on STEMCRaFT nor the forward ballast system integration. We assessed that this would not have a significant impact on the flight performance of the launch vehicle. Furthermore, we determined that it would not be beneficial to extend the Nose Cone by 2 in. by adding additional airframe at the coupler connection side. For these reasons, we assessed that this difference was an allowable deviation from the CDR design with negligible overall impact.

3.3 As-Built Launch Vehicle Overview

The Launch Vehicle has an overall length of 93.75 in. and a maximum body diameter of 6.17 in., yielding an approximate aspect ratio of 16:1. The Launch Vehicle consists of four sections. The forward end of the vehicle is a combination Nose Cone/ Payload Bay, which retains the primary STEMCRaFT payload and an adjustable forward ballast system. Moving aft, the Main Parachute Bay houses the main parachute and associated recovery gear. The midsection of the Launch Vehicle is a combination Avionics and Air Brakes Bay (AVAB) which houses the vehicle recovery avionics and the Air Brakes system. The aft-most section of the vehicle is a combination Drogue Parachute Bay/ Fin Can, housing the drogue parachute gear and the Removable Modular Fin System (RMFS), which provides fin and motor mounting.

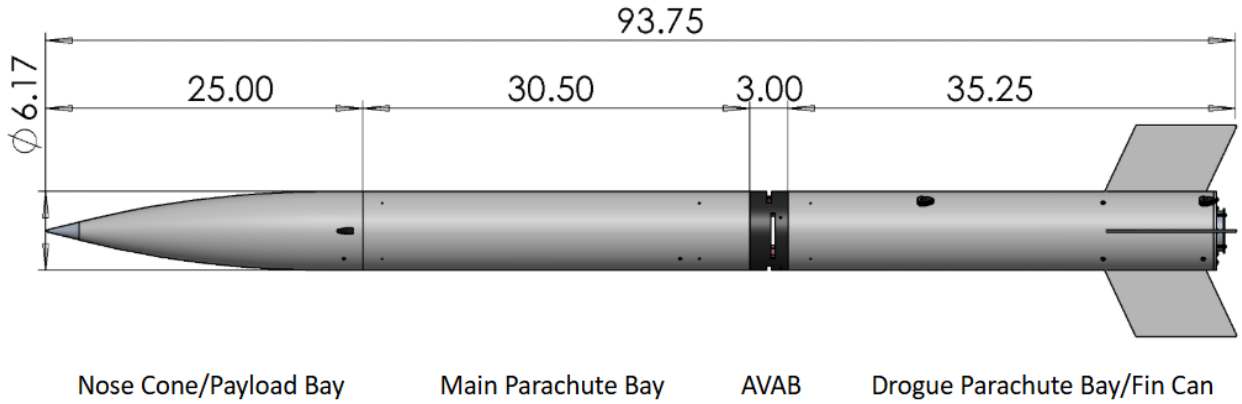

Figure 3.3: As-built Launch Vehicle overall dimensions (in.)



Figure 3.4: Completed, fully integrated Launch Vehicle suspended during MOI testing with Air Brakes extended.

3.3.1 Separation Points and Location of Energetics

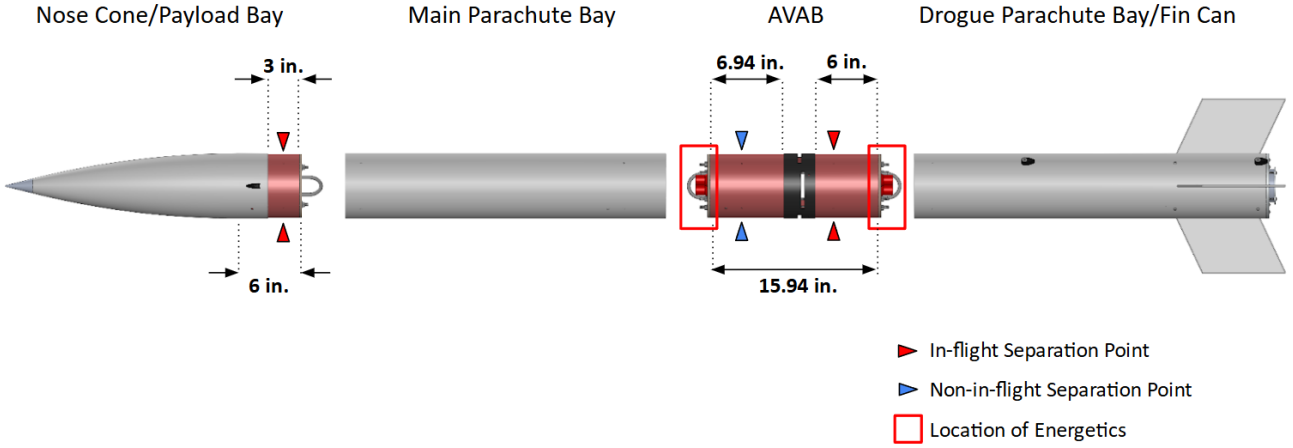

Figure 3.5: Launch vehicle section separation points and energetics location (in.)

The Launch Vehicle features two in-flight separation points and one non-in-flight separation point. The initial in-flight separation point is between the aft end of the AVAB and the Drogue Parachute Bay/Fin Can. Six in. of linear surface contact exists at this connection between the aft AVAB coupler section and the Drogue Parachute Bay/Fin Can airframe, which satisfies NASA Requirement 2.4.1. Separation at this location is initiated via a black powder charge located on the aft AVAB bulkhead. Prior to separation, this connection is secured using four 4-40 nylon shear pins.

The second in-flight separation point is located between the Nose Cone/Payload Bay and the Main Parachute Bay. Three in. of linear surface contact exists at this connection between the Nose Cone shoulder and the Main Parachute Bay airframe, which satisfies NASA Requirement 2.4.3. Separation at this location is initiated via a black powder charge located on the forward AVAB bulkhead. Prior to separation, this connection is secured using four 4-40 nylon shear pins. For more information on the how the sizes of the black powder charges were determined, see Section 3.6.5.

The only non-in-flight separation point is between the aft end of the Main Parachute Bay and the AVAB. Seven in. of linear surface contact exists at this location between the Main Parachute Bay airframe and the forward AVAB coupler section, which satisfies NASA Requirement 2.4.2. During flight, this connection is secured using four nylon push rivets.

3.3.2 Nose Cone/ Payload Bay

The Nose Cone/ Payload Bay body is made of a wound G12 fiberglass resin composite. The overall shape profile of the Nose Cone is a 4:1 tangent ogive, with a 3 in. long cylindrical cross-section at the aft end to accommodate the coupler section. A solid aluminum tip with a conical shape profile is retained on the forward end of the airframe body via the forward ballast system mounting hardware.

The exposed external length of the Nose Cone is 25 in. and the overall length is 28 in. The Nose Cone shoulder consists of a 6 in. long coupler section bonded 3 in. into the body using West System 105 epoxy resin and 206 slow hardener mixture. This remaining 3 in. of exposed coupler mates to the Main Parachute Bay at an in-flight separation point. Internally, a permanent ring bulkhead milled from Baltic birch plywood retains two 1/4 in. threaded rods which form the mounting point for the STEMCRaFT capsule. An aft removable bulkhead also milled from Baltic birch plywood forms the aft closure of the Nose Cone/ Payload Bay.

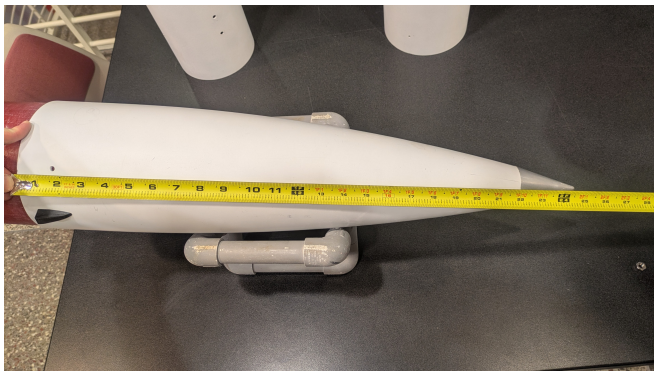

Figure 3.6: Nose Cone/ Payload Bay external length.

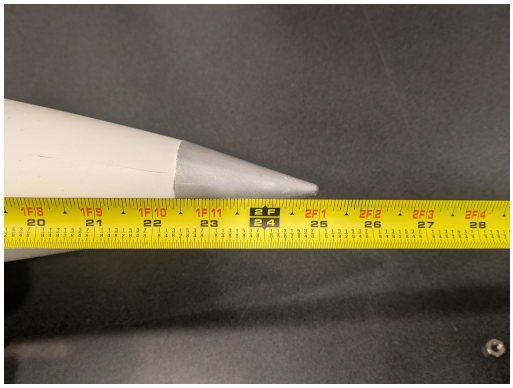

Figure 3.7: Nose Cone external length detail.

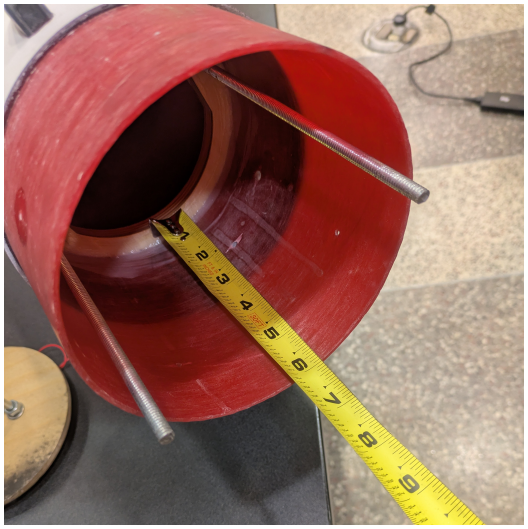

Figure 3.8: Nose Cone/ Payload Bay coupler overall length.

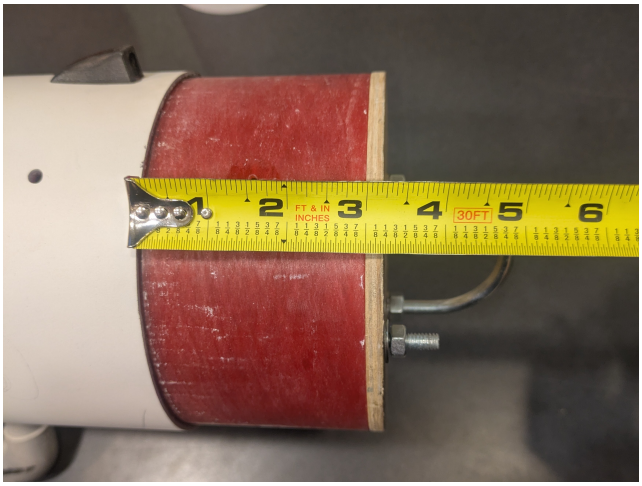

Figure 3.9: Nose Cone/ Payload Bay coupler effective shoulder length.

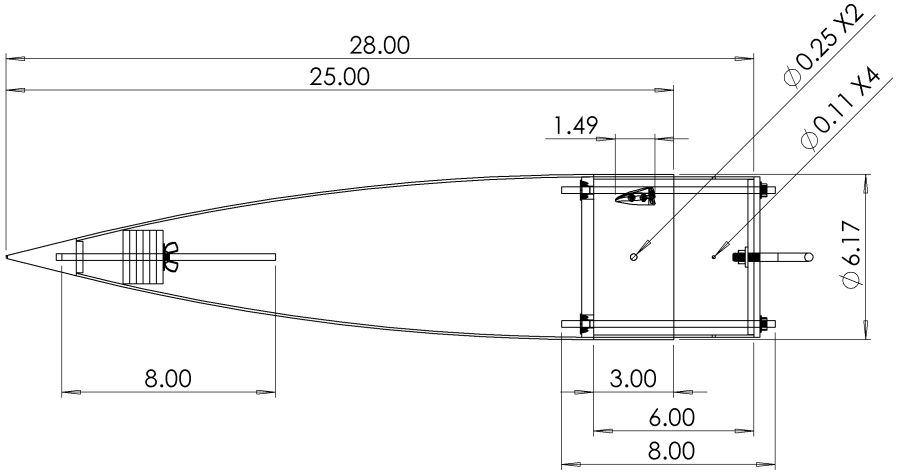

Figure 3.10: As-built Nose Cone/ Payload Bay overall dimensions (in.)

Forward Ballast System

An adjustable forward ballast system is installed at the forward end of the Nose Cone using a 1/4 in. threaded rod that screws into the back of (and retains) the solid aluminum Nose Cone tip. The ballast masses are discs of 1/4 in. thick 6061 aluminum that stack onto the threaded rod and are retained via a large fender washer and a wingnut thumb screw. If not used, the Nose Cone tip is retained via the same threaded rod, a fiberglass washer that was included with the Nose Cone, a steel fender washer, and the same thumb screw.

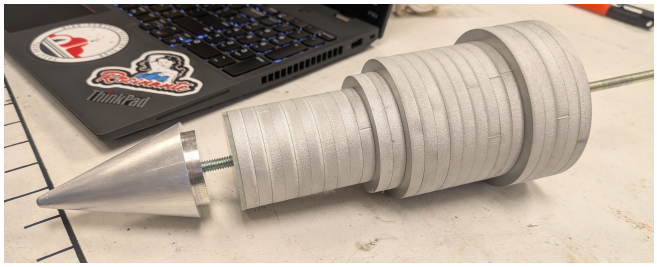

Figure 3.11: Forward ballast system and aluminum tip uninstalled from the Nose Cone, configured with the maximum allowable ballast mass (3.7 lbs).

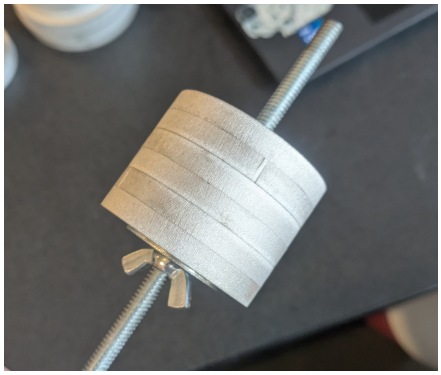

Figure 3.12: Projected required forward ballast mass (0.46 lbs.)

3.3.3 Nose Cone/ Payload Bay Bulkheads

There were no significant deviations from the final CDR design or dimensions. The nominal stock material thickness of 1/2 in. was 0.45 in. in actuality. The removable bulkhead lip was intended to be half the total thickness at 0.25 in., however was reduced to 0.225 in.

The Nose Cone/ Payload Bay bulkheads are both milled from 0.45 in. thick sheets of Baltic birch plywood. The ring bulkhead is permanently installed in the Nose Cone forward of the coupler tube and is bonded to both the Nose Cone body and the coupler tube with West System epoxy resin. This bulkhead has a pair of threaded T-nut inserts which accept 1/4 in. threaded rods. The STEMCRaFT capsule mounts onto these threaded rods, extends partially through the ring bulkhead, and is secured by the aft removable bulkhead. The removable bulkhead features two holes for the threaded rods, and a U-bolt which is the forward anchor for the main parachute recovery gear. The bottom face of the STEMCRaFT capsule is modeled to sit flush on top of the U-bolt washer plate and hex nuts. The removable bulkhead is secured in place using two washers and 1/4 in. hex nuts.

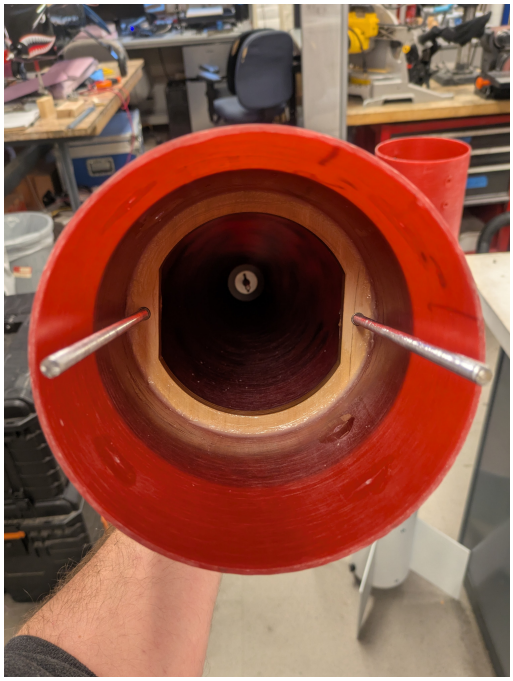

Figure 3.13: Permanent ring bulkhead with pair of 1/4 in. threaded rods.



Figure 3.14: Aft removable bulkhead and STEMCRaFT capsule interface.

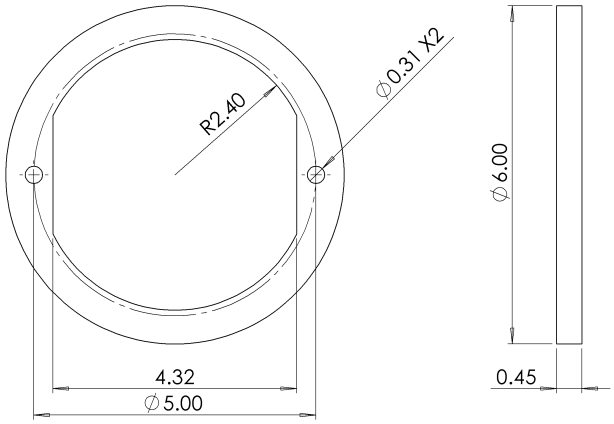

Figure 3.15: As-built Nose Cone/ Payload Bay ring bulkhead dimensions (in.)

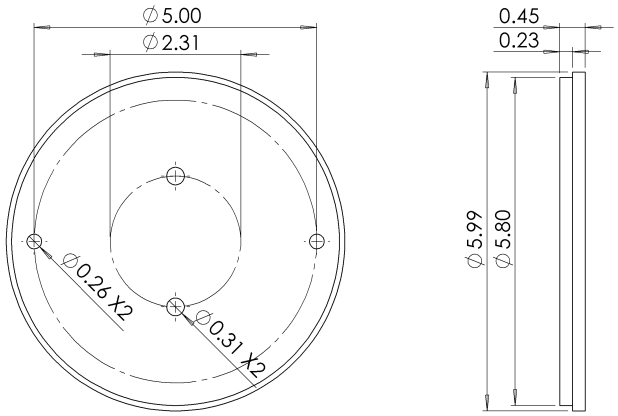

Figure 3.16: As-built Nose Cone/ Payload Bay removable bulkhead dimensions (in.)

3.3.4 Main Parachute Bay

There were no notable deviations from the final CDR design or dimensions.

The Main Parachute Bay is a 30.5 in. long section G12 fiberglass airframe that houses the main parachute, main parachute shock cord, deployment bag, and deployment bag shock cord. The forward end has four holes spaced at 90-degree radial increments for the #4-40 shear pins. This enables it to mate to the Nose Cone/Payload Bay shoulder at an in-flight separation point. The aft end mates to the forward AVAB coupler section at a non-in-flight separation point and has four equally spaced holes for the nylon rivets. Forward of two opposite side rivet holes are two 1/4 in. pressure ports for the recovery Avionics housed within the forward portion of the AVAB. The pressure ports are drilled through both the AVAB coupler and Main Parachute Bay airframe wall to position them as far upstream of the Air Brakes mechanism as possible.

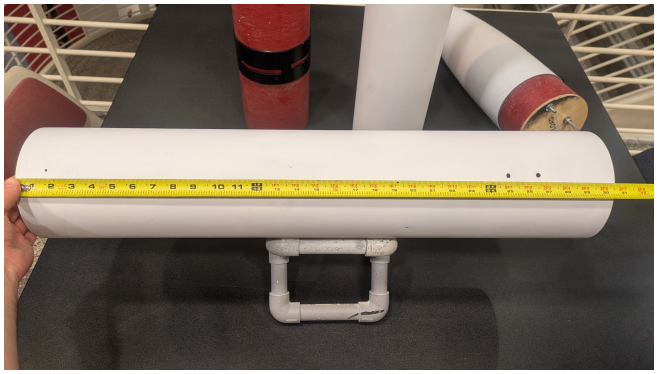

Figure 3.17: Main Parachute Bay overall length.

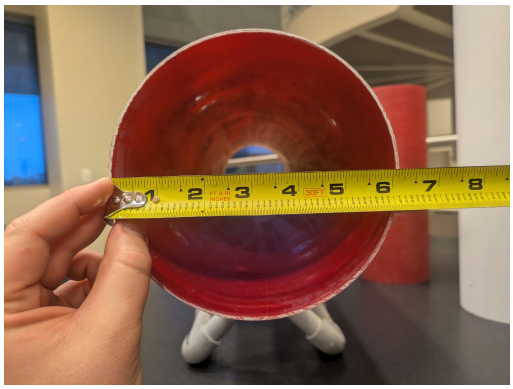

Figure 3.18: Main Parachute Bay diameter.

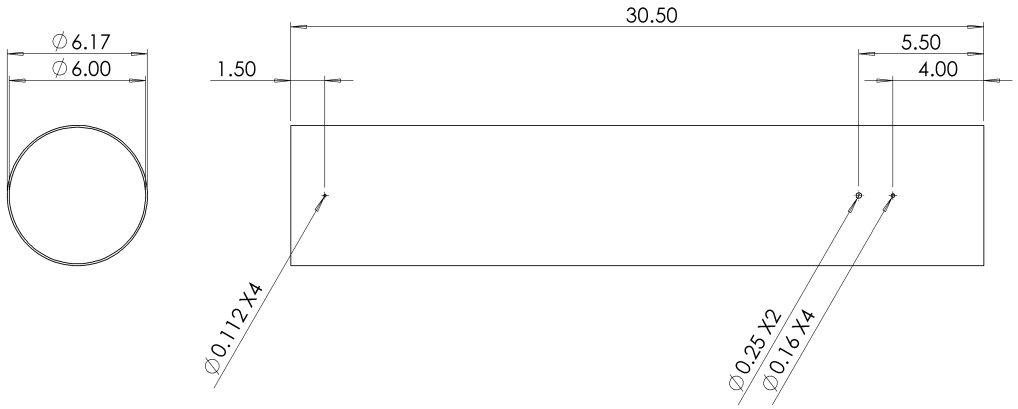

Figure 3.19: As-built Main Parachute Bay dimensions (in.)

3.3.5 Avionics/ Air Brakes Bay (AVAB)

There were no significant deviations from the final CDR design, however the coupler tube received from the vendor was 15.94 in. long instead of the planned 16 in. The dimensional drawing is also updated with Air Brakes mechanism fastener holes which were not included in the CDR drawings.

The AVAB consists of a 15.94 in. long G12 fiberglass coupler tube which houses both the avionics and secondary Air Brakes payload. These subsystems are housed together to eliminate the need for an additional structural section within the Launch Vehicle. This section is partitioned into a forward and an aft bay via internal horizontal sled bulkheads. The forward partition houses the recovery avionics and features two 1/4 in. holes for pressure readings as well as four holes for nylon push rivets. The forward end of the AVAB coupler mates to the aft end of the Main Parachute Bay with 6.94 in. of linear contact at the only non-in-flight separation point. The aft partition houses the Air Brakes payload and mates to the forward end of the Drogue Parachute Bay/Fin Can with 6 in. of linear contact. The aft coupler section features four holes for 4-40 nylon shear pins that secure this connection at an in-flight separation point. A 3 in. long switchband overlaps both interior sections and is bonded to the coupler tube with epoxy resin. A hole for the recovery avionics pull-pin arming switch is drilled near the forward edge of the switchband. The aft portion of the switchband features two pairs of staggered, circumferential slots for the Air Brakes system. These slots allow the Air Brake drag fins to extend into the airflow during the coast phase. Four 18 in. long, 1/4 in. diameter threaded rods run the length of the bay and form the internal structure for mounting all of the Avionics and Air Brakes component sleds.

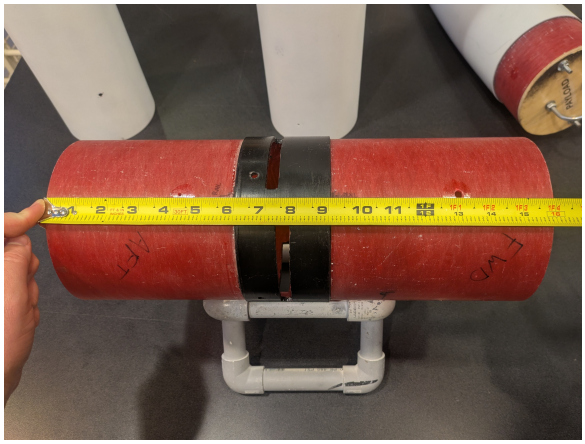

Figure 3.20: AVAB overall length (note: reversed orientation from drawing).

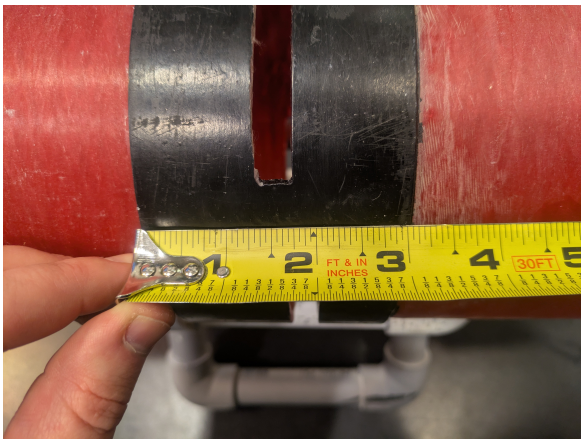

Figure 3.21: AVAB switch band length.

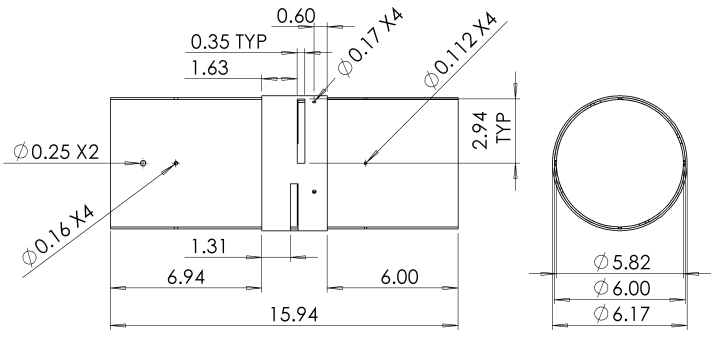

Figure 3.22: As-built AVAB dimensions (in.)

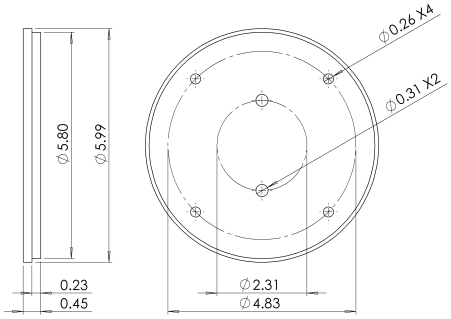

Figure 3.23: As-built AVAB bulkhead dimensions (in.)

3.3.6 AVAB Bulkheads

There were no significant deviations from the final CDR design or dimensions. The nominal stock material thickness of 1/2 in. was 0.45 in. in actuality. The bulkhead lip was intended to be half the total original thickness at 0.25 in., however was reduced to 0.225 in.

The AVAB bulkheads are made of 0.45 in. thick Baltic birch plywood. Similar to the Nose Cone/Payload Bay removable bulkhead, the AVAB bulkheads feature a a 0.225 in. thick lip for centering and sealing purposes. They are retained to the AVAB coupler tube via hex nuts on the four threaded rods that extend through holes in the bulkheads. U-bolts on the forward and aft bulkheads are anchor points for the Main Parachute and Drogue Parachute gear, respectively. Each bulkhead also features two 3-D printed PLA charge wells that contain the separation energetics. Terminal blocks are also mounted on the bulkheads to provide an intermediate connection point for the e-matches which initiate the separation energetics.

3.3.7 Drogue Parachute Bay/ Fin Can

There were no notable deviations from the final CDR design or dimensions.

The Drogue Parachute Bay/Fin Can forms the aft end of the Launch Vehicle and houses the drogue parachute recovery gear, the Removable Modular Fin System (RMFS), and the AeroTech RMS-75/3840 motor casing. The body is a 33.5 in. long section of G12 fiberglass airframe with four end-cut fin slots to accept the RMFS. With the RMFS installed, the fins extend an additional 1.75 in. beyond the airframe body, bringing the total section length to 35.25 in. Eight fastener holes are present between the fin slots for the #8-32 machine screws that secure the RMFS to the airframe body. Shear pin holes are also present near the forward end for mating the drogue parachute bay/ Fin Can to the AVAB.

Two commercially available 1515 Delrin airfoiled rail buttons are attached to this section and are positioned at 65 in. and 89 in. from the forward tip of the Launch Vehicle. The forward rail button screw fastens through the wall of the Fin Can and is secured with a thin plywood backer, washer, and hex nut. The aft rail guide screw replaces one of the RMFS mounting screws and is fastened through one of the L-brackets on the aft RMFS centering ring.

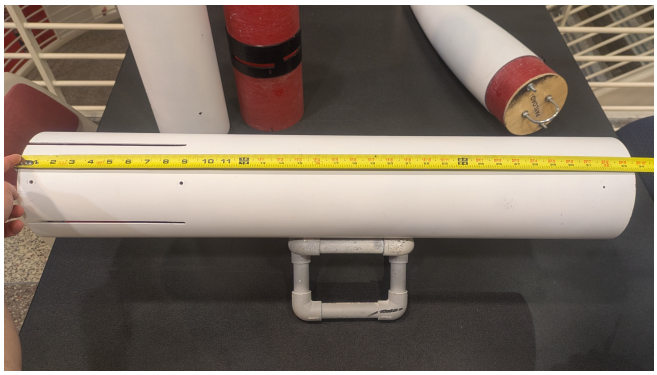

Figure 3.24: Drogue Parachute Bay/ Fin Can airframe length.

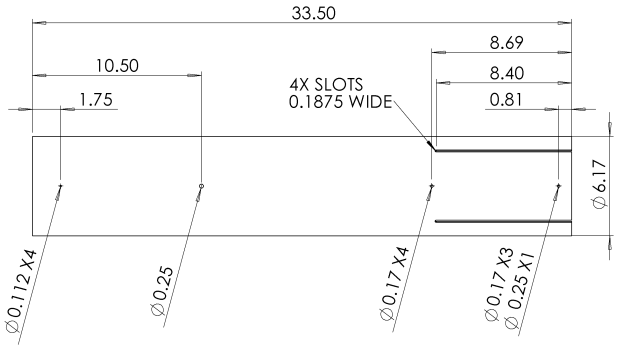

Figure 3.25: As-built Drogue Parachute Bay/ Fin Can dimensions (in.)

3.3.8 Removable Modular Fin System (RMFS)

There were no significant deviations from the final CDR design or overall dimensions. The nominal stock material thickness of 1/2 in. for the centering bulkheads was 0.45 in. in actuality.

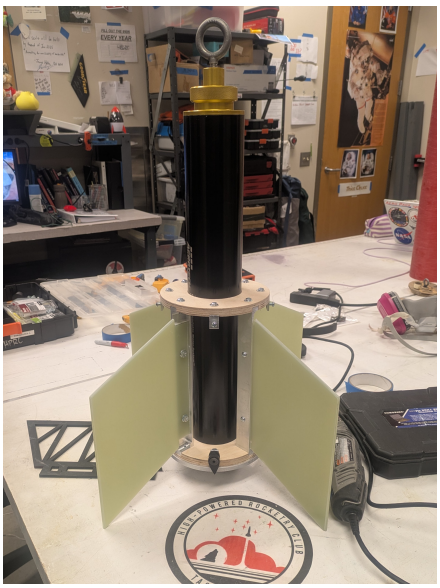

Figure 3.26: RMFS with installed fins and AeroTech RMS 75-3840 motor casing.

The RMFS is a multipurpose structural assembly that mates into the aft end of the Drouge Parachute Bay/Fin Can. It serves as the attachment point for the fins and provides centering and retention of the AeroTech RMS-75/3840 motor casing. This design was chosen over a permanent epoxied fin/motor mount design to enhance the reusability of the launch vehicle in the event of damage to the Fin Can or fins.

The RMFS consists of a forward centering bulkhead, four fin runners, an aft centering bulkhead, a thrust plate, and a motor retainer ring. The assembly is fully modular, with all components secured together with #8-32 machine screws. This enables parts to be quickly swapped in the unlikely event of damage, and contributes to rapid re-usability of the Launch Vehicle.

The forward and aft centering bulkheads are constructed of 1/2 in. thick Baltic birch plywood. Four small L-brackets made from 1/8 in. thick 6061 aluminum angles sit into recessed slots 1/8 in. deep on the interior face of each centering ring. These L-brackets provide the attachment point for the machine screws and hex nuts that secure the RMFS to the airframe. Each centering ring also features four 1/4 in. recessed slots which seat the fin runners and prevent them from twisting. Through-holes on the centering bulkheads align with threaded holes in each end of the fin runners, and four machine screws with washers fasten the fin runners and centering bulkheads together as a unit. Spacing between the centering bulkheads, airframe, and motor casing is such that a sufficient seal is created to contain the gasses generated during separation for drogue parachute deployment.

Four, 9 in. long 6061 aluminum fin runners provide longitudinal strength and rigidity for the assembly. Each runner is a single part with an L-shaped cross section. This profile provides excellent resistance to bending, twisting, and buckling, resulting in a sturdy connection point for the fin. The forward and aft ends of each runner have an #8-32 threaded hole that retains machine screws passing through the forward and aft centering bulkheads. These connections secure the RMFS assembly.

A 1/4 in. thick 6061 aluminum thrust plate sits flush with the aft end of the airframe and evenly distributes the motor thrust force to the aft circumference of the Launch Vehicle during the boost phase of flight. Four machine screws run through the thrust plate, aft centering ring, and into the threaded holes in the fin runners. These connections secure the aft portion of the RMFS assembly together.

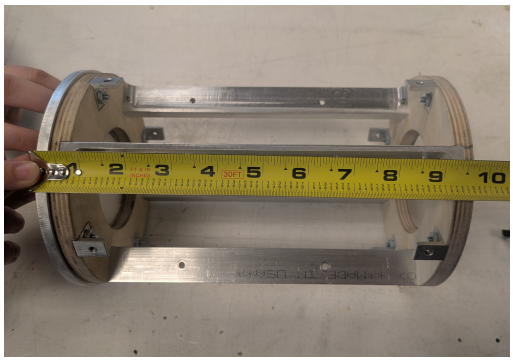

Figure 3.27: RMFS internal structure length.

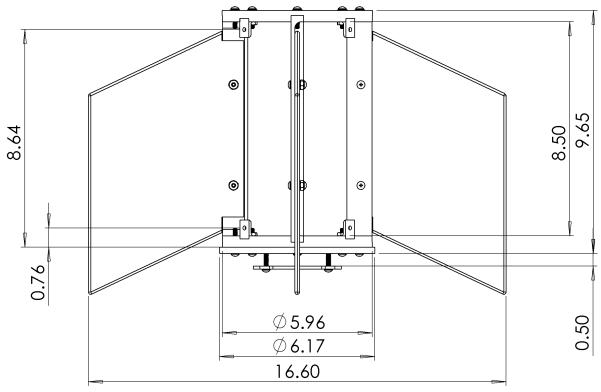

Figure 3.28: As-built RMFS overall dimensions (in.)

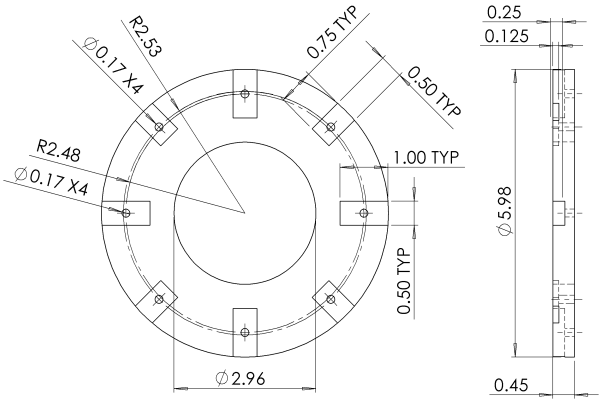

Figure 3.29: As-built RMFS centering bulkhead dimensions (in.)

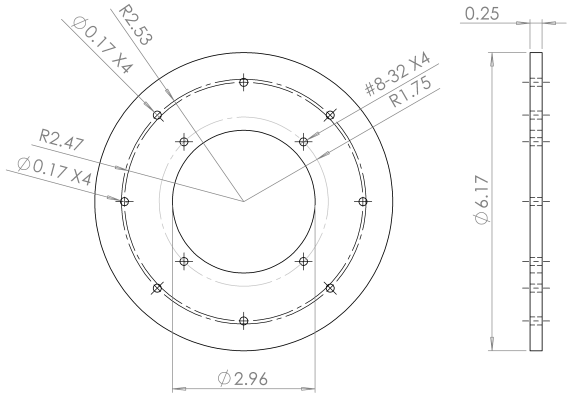

Figure 3.30: As-built RMFS thrust plate dimensions (in.)

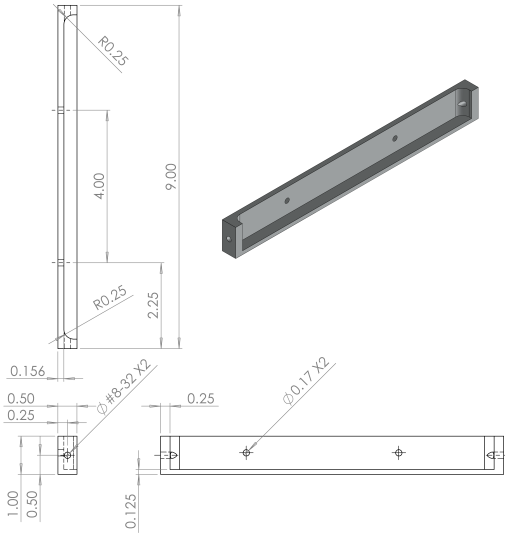

Figure 3.31: As-built RMFS fin runner dimensions (in.)

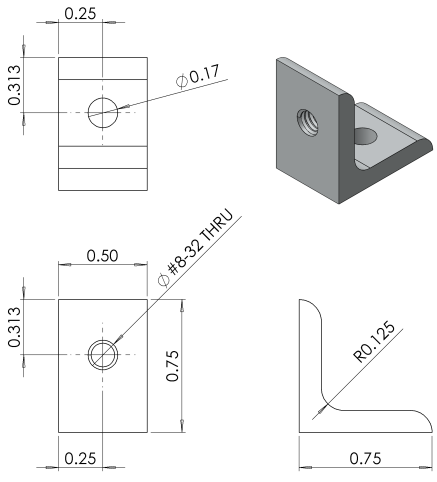

Figure 3.32: As-built RMFS L-bracket dimensions (in.)

3.3.9 Fins

There were no notable deviations from the final CDR design or dimensions.

The Launch Vehicle features four, non-tapered, swept fins arranged in a cruciform pattern. The fins are made of 3/16 in. G10 fiberglass laminate sheet and have rounded leading and trailing edges. The fins have a sweep angle of 25.3 degrees, an effective semi-span of 5.3 in., and a uniform chord length of 8 in. The fins have rectangular tabs along the root chord that extend through slots in the airframe. The faces of these tabs sit flat against the RMFS fin runners and secure to the runners via two #8-32 machine screws with washers and hex nuts.

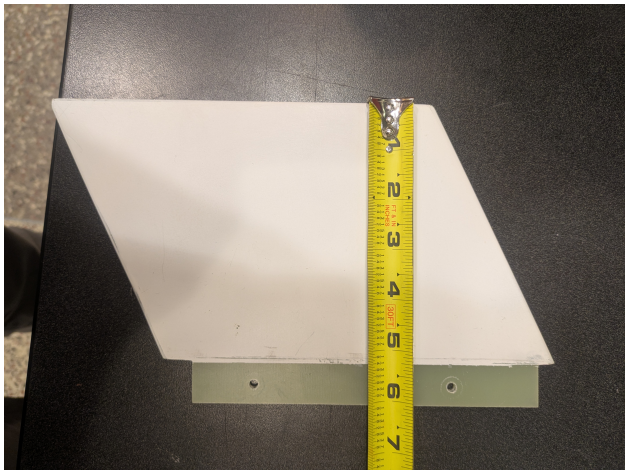

Figure 3.33: Fin semi-span length.

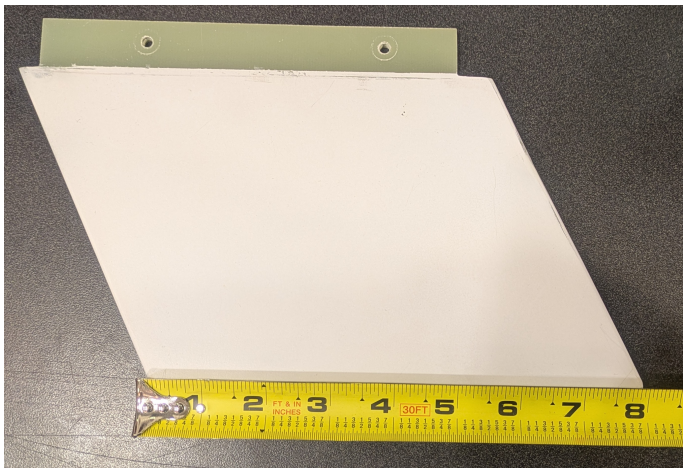

Figure 3.34: Fin root and tip chord length.

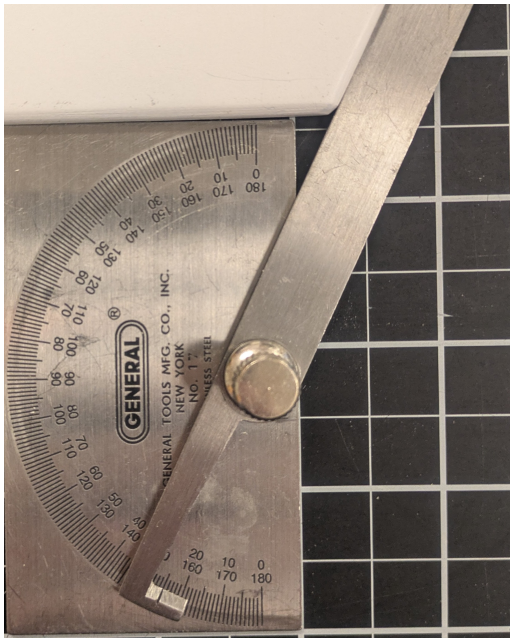

Figure 3.35: Fin sweep angle measured at leading edge.

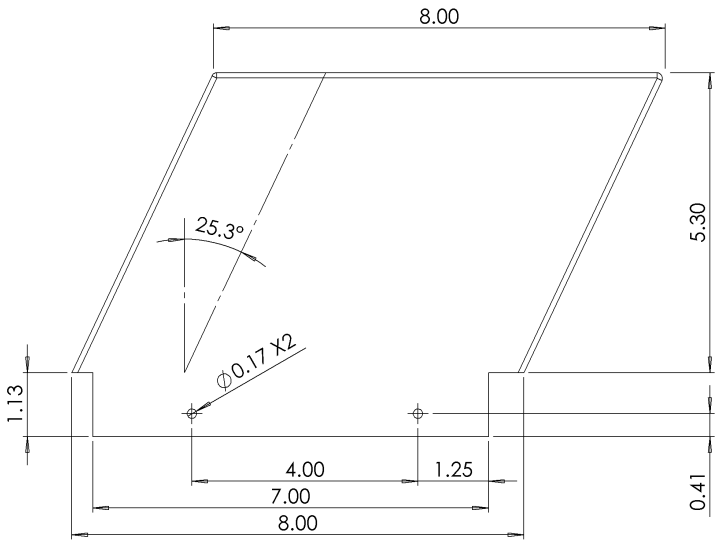

Figure 3.36: As-built fin dimensions (in.)

3.3.10 Motor Mounting and Retention

There were no notable deviations from the final CDR design or dimensions.

The AeroTech RMS 75-3840 motor casing is inserted through the thrust plate and the two centering bulkheads of the RMFS. These components keep the motor casing securely centered within the airframe. The forward centering ring forms an adequate gas seal against the casing body which enables separation. A motor retaining ring is attached via four additional machine screws that fasten into threaded holes in the thrust plate. This ring secures the motor casing to the RMFS assembly after motor burn out.

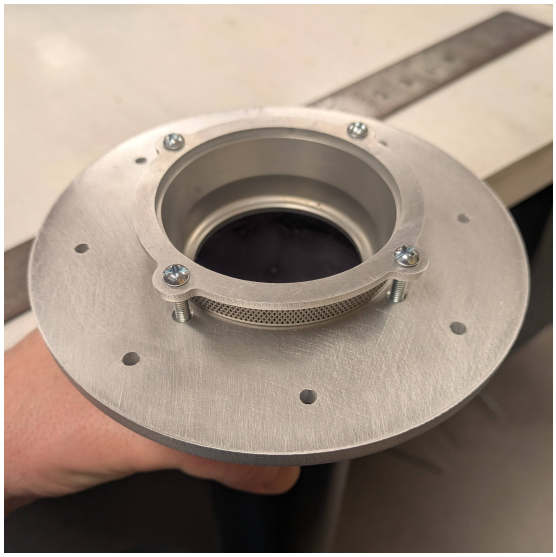

Figure 3.37: Motor retainer installation demo with AeroTech RMS-75/3840 motor casing.

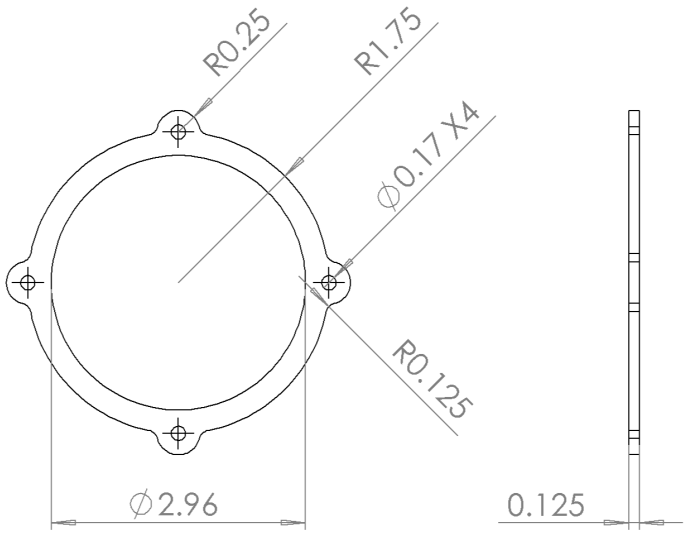

Figure 3.38: As-built motor retainer dimensions (in.)

3.3.11 As-Built Mass Analysis

Table 3.2 provides a comparison between the estimated section masses and the as-built section masses. Overall, the as-built vehicle was 1.3 lbs. heavier than estimated, which can be attributed to the addition of some components such as quick links, larger batteries, additional shock cord, and slight underestimation at CDR of fin mass and motor internal component masses. Notably, the as-built Nose Cone/ Payload Bay had a lower mass than estimated. This can partly be attributed to the slightly shorter overall length than was expected and possibly differences in airframe material density. Coupled with the mass growth in the other aft sections, 0.46 lbs. of forward ballast had to be added to the Nose Cone to meet minimum stability and CG requirements, which also contributed to overall mass growth.

Table 3.2: Estimated to As-Built Section Mass Comparison.

Section	CDR Estimated Weight [lbs.]	As-Built Weight [lbs.]	Percent Difference
Nose Cone/ Payload Bay	8.81	7.90	- 10.9 %
Main Parachute Bay	5.47	5.90	+ 7.56 %
AVAB	6.60	7.60	+ 14.1 %
Drogue Parachute Bay/ Fin Can	17.51	18.28	+ 4.3 %
Launch Vehicle Total (Wet + Ballast)	**38.39**	**39.68**	**+ 3.3 %**

Table 3.3: As-Built Section Mass Breakdown

Nose Cone/Payload Bay	
Component	Weight [lbs.]
Nose Cone Body Assembly	3.74
Aluminum Tip	0.33
Threaded Rods (2x)	0.16
Removable Bulkhead + Hardware	0.53
STEMCRaFT Payload	2.55
Ballast System Hardware	0.12
Ballast Mass	0.46
Section Subtotal	**7.90**

Main Parachute Bay	
Component	Weight [lbs.]
Airframe	3.66
Main Parachute	0.95
Deployment Bag	0.18
Main Shock Cord	0.48
Deployment Bag Shock Cord	0.12
Quick Links (3x)	0.51
Section Subtotal	**5.90**

AVAB	
Component	Weight [lbs.]
Airframe Tube Assembly	2.55
Bulkheads + Hardware (2x)	1.30
Threaded Rods (4x)	0.70
Air Brakes System	2.36
AV Sled	0.69
Section Subtotal	**7.60**

Drogue Parachute Bay/Fin Can	
Component	Weight [lbs.]
Airframe	3.88
Drogue Parachute + Small Quick Link	0.33
Drogue Shock Cord	0.74
Nomex	0.05
Quick Links (2x)	0.34
RMFS Structural Assembly + Hardware	1.93
Fins (4x) + Hardware	2.56
Motor Retainer + Hardware	0.05
AeroTech RMS 75/3840 Casing + Eye bolt	2.66
L1520T Propellant Grains (3x)	3.90
Delay/Smoke Grain	0.14
Non-combusted Motor Components (Nozzle, Liner, etc.)	1.63
Section Subtotal	**18.28**

3.4 Launch Vehicle Flight Reliability

3.4.1 Structural Elements

Airframe

The airframe material is G12 fiberglass which is strong, cost-effective, water-resistant, and durable. Finite element analysis modeling, verification testing, and real-world flight performance have proven the airframe sections and airframe interface fasteners (nylon rivets and shear pins) are sufficiently strong to withstand expected loads experienced during all phases of flight. In places where the airframe and coupler sections were bonded together, the steps outlined in Section 3.5 were closely followed to meet Team Derived requirements and ensure the bond connection was sufficiently strong Additionally, the edges of all fastener holes drilled into the airframe were resealed with a light application of West System 105 epoxy and 206 slow hardener mixture. This prevents fraying of individual fibers or delamination from repeated shear loading applied by the machine screws, as well as repeated assembly and disassembly of the Launch Vehicle.

Fins

The fin material is 3/16 in.-thick G10 fiberglass composite which provides high stiffness and durability. 1/8 in. thick fins of similar design were subjected to repeated impact testing early in the design cycle against various surfaces and impact angles and performed well with only cosmetic damage. Calculations were conducted that show the fins are not susceptible to aerodynamic flutter across the velocities the Launch Vehicle will achieve during flight. Furthermore, finite element modeling and real-world flight performance have shown that the fins and associated RMFS mounting hardware/methods can survive even off-nominal, high-energy landing scenarios without damage or loosening of fasteners.

Bulkheads

The bulkheads and centering bulkheads are milled from 1/2 in. sheets of Baltic birch plywood. This material is a high grade plywood that is free of voids or softer filler wood between plies. Finite element analysis modeling and experimental, destructive tensile testing have shown that the bulkheads and associated assemblies greatly exceed the required strength to meet team-derived safety factor requirements.

Bulkhead Assembly Hardware

The bulkhead assemblies consist of the wood bulkheads, 5/16 in. diameter steel U-bolts, and 1/4 in. diameter threaded rods. The U-bolts provide anchoring for the recovery gear and the threaded rods retain the bulkheads in place at the section ends. During recovery, the entire assembly is subjected to tensile loading from parachute deployment. The U-bolts have a manufacturer load limit of 1300 lbf. and were subjected to higher loading during verification testing without failure. Likewise, the zinc-plated steel threaded rods provide more than sufficient cross sectional area to withstand the tensile loads. Finite element analysis modeling, verification testing, and real-world flight performance have proven that these assemblies can withstand expected loading with a high factor of safety.

3.4.2 Electrical Elements

Wiring

Before securing any wires into blast cap terminal blocks or altimeter terminal blocks, the wires are first stripped 3/4” inches from the end. The wires are then folded into a loop to increase the metal surface contact within the terminal blocks. All wire-to-wire connections are made using JST SM connectors (see Section 3.6.6 for more information). The battery connection wires for the Eggfinder Mini and the wires connected to the altimeter pull pin switches are soldered in place.

Avionics Retention

To secure recovery avionics to the AV Sled plates, brass M2.5 heat inserts were heat staked directly into the PLA and nylon M2.5 standoffs were then threaded into the heat inserts. Recovery avionics are placed on top of these standoffs and fixed in place using steel M2.5 screws.

Battery Retention

Velcro is used to affix all of the recovery batteries to their dedicated custom battery slots on the bottom AV Sled battery plate. After the batteries are inserted and plugged in on launch day, electrical tape is wrapped over the top of the batteries as an additional retention method.

3.4.3 Mission Success Criteria

Based on verification and validation testing, calculations, models, and real-world flight performance, the team is confident that the overall vehicle design can exceed all success criteria outlined in Table 3.1 while being highly re-usable. All subsystems integrate well and are securely retained within the Launch Vehicle. Overall, the Launch Vehicle is flight proven to be safe and more than capable of withstanding all loading from motor thrust, aerodynamic forces, parachute shock, and landing impact while being able to perform its designed mission.

3.5 Launch Vehicle Manufacturing

3.5.1 Manufacturing Safety and Requirements

Due to the inherent hazards in some of the manufacturing processes, all team members were required to follow the hazard mitigation steps outlined in Table 7.4 and safety requirements outlined in Table 8.42. Furthermore, functional Team Derived requirements outlined in Table 8.42 ensured proper manufacturing practices were followed that minimized the introduction of errors or inaccuracies. As a result of these controls, Launch vehicle manufacturing was completed efficiently, without excess stock material waste, and without any major safety incidents.

3.5.2 Airframe/ Coupler Cutting

Airframe and coupler section cutting was primarily performed using a lathe and hand grinder with a diamond cutting blade. Each uncut fiberglass tube was first squared at one end in the lathe then the orientation flipped with the squared end placed in the chuck. The uncut end was measured, marked, then cut to size. Afterwards, the edges were sanded and the tubes were wiped clean of debris.



Figure 3.39: Uncut body tube in the lathe.

3.5.3 Nose Cone/ Payload Bay Construction

Bulkhead Fabrication



Figure 3.40: Nose Cone bulkhead milling using a ShopBot CNC router.

The Nose Cone permanent ring and removable bulkheads were first designed in CAD then their top profiles were exported as drawing files. These files were imported into VCarve Pro software to generate tool paths for a ShopBot CNC mill, including holes for the threaded rods and pilot holes for the T-nut inserts or U-bolts. The bulkhead lip thickness was set to be 1/2 of the sheet thickness. The bulkheads were then milled from sheets of 1/2 in. thick Baltic birch plywood using a 1/4 in. up-cut end mill tool.

After milling, tabs, rough edges, and stray fibers were removed from the bulkheads using sandpaper. The T-nut holes in the ring bulkhead and the U-bolt holes in the removable bulkhead were further drilled out to the final size using a drill press. The T-nut inserts were then hammered in place into the ring bulkhead with a mallet and block of wood to distribute force and avoid deforming the inserts.

Coupler Assembly Bonding

Next, the ring bulkhead was bonded to the Nose Cone coupler section. This was performed by sanding then cleaning the face of the ring bulkhead and the lip and contact face of the coupler section. A thin layer of West System 105 epoxy and 206 slow hardener mixture was applied to the lip of the coupler section and the ring bulkhead was placed on top. 1/4 in. diameter machine screws were inserted into the threaded T-nut holes to prevent epoxy fouling of the threads. Weights and spacers were placed on top of the ring bulkhead to ensure uniform contact between the parts during the curing process. The assembly was then left to cure for 24 hours.



Figure 3.41: Bonding the ring bulkhead to the coupler tube.



Figure 3.42: Coupler assembly curing under compression.

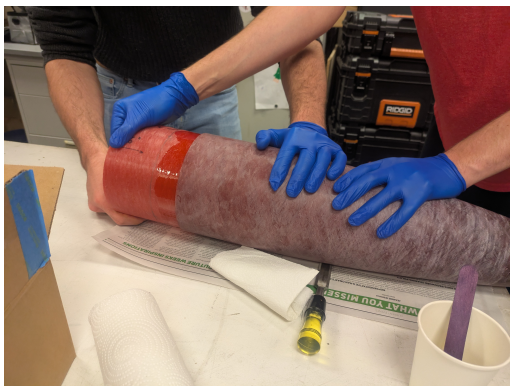

Figure 3.43: Bonding the coupler assembly into the Nose Cone body.

After curing, the coupler assembly was then bonded into to the Nose Cone body. The tube was marked at the correct insertion depth and the contact surfaces of the Nose Cone body and coupler were lightly sanded then cleaned with acetone. After air drying for 15 mins, a thin coat of West System 105 epoxy and 206 slow hardener mixture was applied to the contact area of the coupler tube and it was slowly inserted and rotated within the Nose Cone body to uniformly distribute the epoxy. Excess epoxy was wiped away. The Nose Cone body was then supported vertically and left to cure for 24 hours.

Hole Drilling and Camera Installation

All holes were drilled into the Nose Cone using a drill press and tube centering jig. STEMCRaFT pressure port holes as well as camera cable slot and fastener holes were drilled through the Nose Cone body only. To drill the four shear pin holes, the Main Parachute Bay was mated to the coupler and held in place with masking tape. The shear pin holes were then simultaneously drilled through both the Main Parachute Bay and Nose Cone coupler.

The camera was installed by inserting two M4 screws with washers from the interior side of the Nose Cone and screwing them into hex nuts recessed into the body of the camera housing. The camera and ribbon cable were then slotted through the cable hole and into the housing (See 3.2). The ribbon cable running from the camera connects to the STEMCRaFT through a port in the capsule.

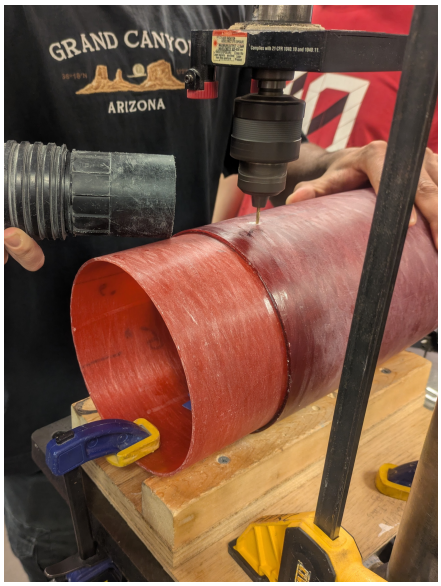

Figure 3.44: Drilling a pressure port hole in the Nose Cone body.

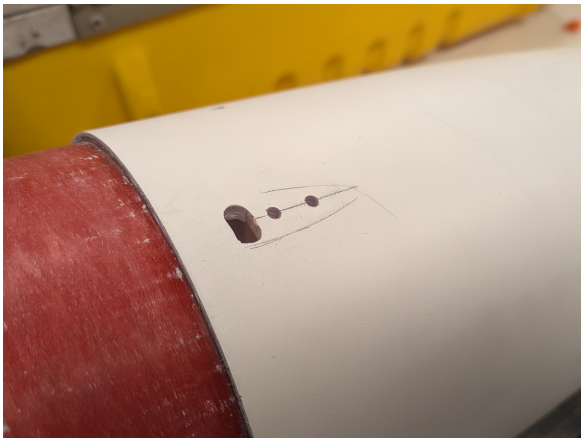

Figure 3.45: Camera housing fastener holes and slot for the ribbon cable.

Forward Ballast System

The forward ballast system was manufactured by generating a CAD model of each different size mass disc then creating a drawing file with the required number of discs. This pattern was then cut from a 1/4 in. 6061 aluminum sheet stock with a water jet cutter in the MAE Senior Design shop. The threaded rod for installing the masses was cut from a length of 1/4 in. diameter zinc-plated steel threaded rod using a Dremel hand tool and metal cutting wheel.

3.5.4 Main Parachute Bay Construction

The Main Parachute Bay was cut to the final length using the method described in Section 3.5.2. All fastener and pressure port holes drilled through the Main Bay required alignment with either the Nose Cone or AVAB. Therefore, for each section the Main Parachute Bay was mated and secured with masking tape. The required holes were then drilled through both sections simultaneously using a drill press and the tube holding jig.

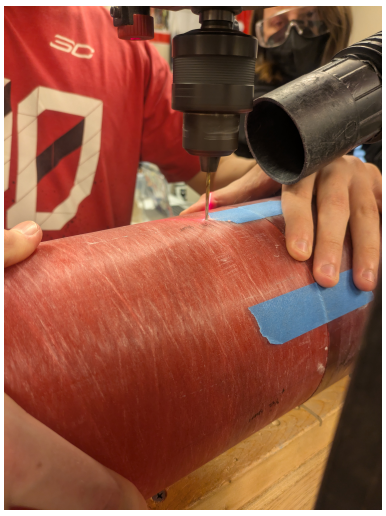

Figure 3.46: Drilling a shear pin hole through the Main Parachute Bay and Nose Cone coupler.

3.5.5 AVAB Construction

Bulkhead Fabrication

The AVAB bulkheads were manufactured from a 1/2 in. thick sheet of Baltic birch plywood. A drawing file derived from the bulkhead CAD model was used to program tool paths for a ShopBot CNC mill. A 1/4 in. up-cut end mill tool was used on the mill to drill holes for the threaded rods and U-bolts, and to cut the outer diameters, including the lip. Next, the tabs and rough edges left over from the milling process were sanded smooth. The central U-bolt holes were enlarged slightly using a drill press to accommodate the U-bolts. Next, small pilot holes were drilled and the 3D-printed charge wells and terminal blocks were installed using screws. Finally, the U-bolt, washer plate, and hex nuts were installed and tightened.



Figure 3.47: CNC milling the AVAB bulkheads.

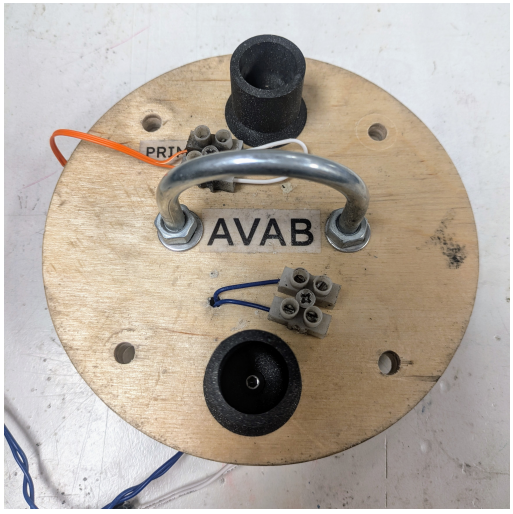

Figure 3.48: Finished AVAB bulkhead.

Coupler and Switch Band Fabrication

The AVAB switchband was 0.25 in. longer than required upon receipt from the vendor and was trimmed to the correct 3 in. length using the method described in Section 3.5.2. The switch band was bonded to the AVAB coupler tube by lightly sanding the contact areas on both parts then wiping them clean with acetone. The correct positioning was measured and marked on the coupler tube, then a thin layer of West System 105 epoxy and 206 slow hardener mixture was applied to the entire contact area. The switch band was then slid into the correct position on the coupler tube and rotated to uniformly distribute the epoxy. Excess epoxy was wiped away and the assembly was left to cure for 24 hours.

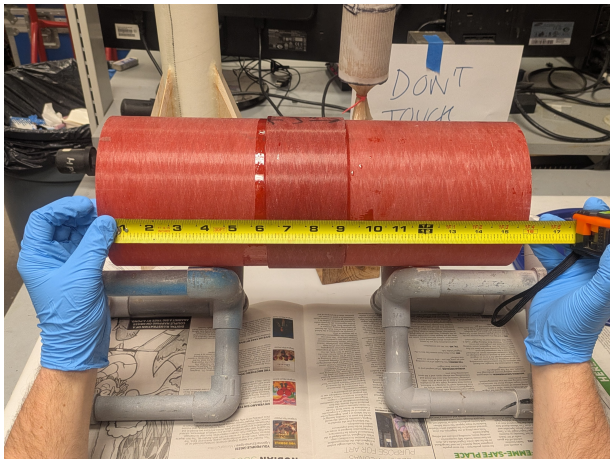

Figure 3.49: Verification of switch band positioning prior to AVAB assembly curing.

After the curing, the Air Brake mechanism slots and fastener holes were marked onto the switch band using a 3D printed marking guide. The holes were drilled using a drill press and the slots were then cut using a Dremel with a diamond cutting wheel. A thin sheet of aluminum was formed around the switchband and used as a cutting guard, along with multiple layers of aluminum tape. The slots were cleaned up using a file and the exposed edges were sanded smooth.

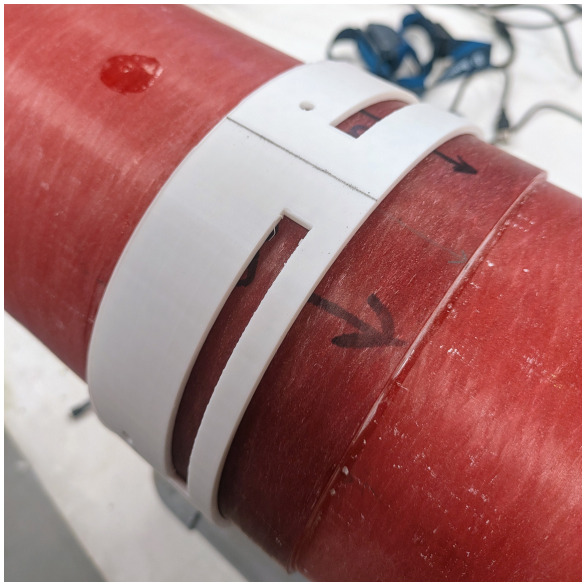

Figure 3.50: Marking the Air Brake mechanism fastener hole and fin slots using a 3D printed guide.



Figure 3.51: Cutting the air brake slots using a Dremel with diamond cutting wheel.

3.5.6 Drogue Parachute Bay/ Fin Can Construction

The Drogue Parachute Bay/ Fin Can airframe tube was cut to the correct length using the method described in Section 3.5.2. The forward shear pin holes were drilled through both the airframe and AVAB coupler section simultaneously by mating them together with masking tape, then using a drill press. The RMFS fastener holes and fin slots were marked with a 3D-printed marking guide and verified using the built RMFS assembly (minus fins) inserted into the aft end of the airframe tube. A LED headlamp was used to backlight the assembly and precisely verify the holes and slot markings were correctly positioned.



Figure 3.52: RMFS interface marking with a 3D printed marking guide.

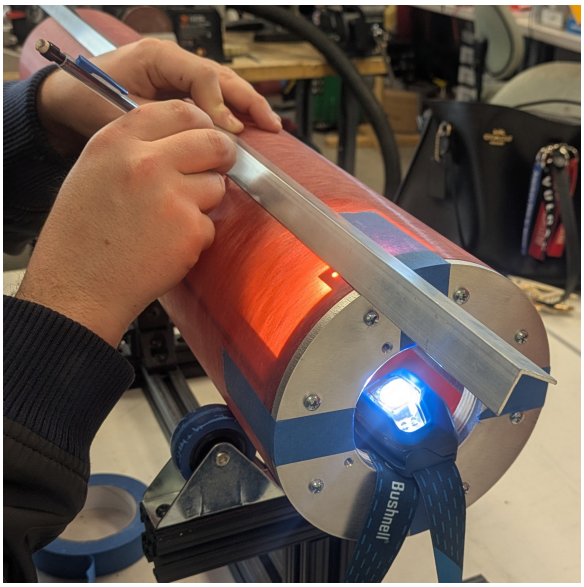

Figure 3.53: RMFS interface marking and verification using back lit RMFS assembly.

After marking, the RMFS fastener holes and forward rail button hole were drilled using a drill press and a tube holding jig. The RMFS end cut fin slots were cut using a Dremel with a diamond cutting wheel. The fin slots were cleaned up with a file, then sanded smooth.



Figure 3.54: Cutting the RMFS fin slots.



Figure 3.55: End cut RMFS fin slot.

3.5.7 Fin Construction

The fins were manufactured from 3/16 in. thick sheets of G10 fiberglass composite. A fabrication template was created using the CAD model of the fins and then 3D printed out of PLA filament. This template was used to trace the outline of the fins onto the fiberglass sheets. Next, the fin outlines were cut from the sheets using a wet tile saw and a Dremel rotary tool with a diamond cutting wheel. The rough cut fins were then sanded to their final dimensions using a belt sander and test fit against the template to ensure uniformity. Then, the leading, trailing, and tip chord edges of the fins were rounded off using the belt sander. Lastly, fastener holes for attachment to the fin runners were marked using the template and drilled using a drill press.



Figure 3.56: Tracing the fins onto G10 sheets using the 3D printed template.



Figure 3.57: Cutting the fin shape with a tile saw.

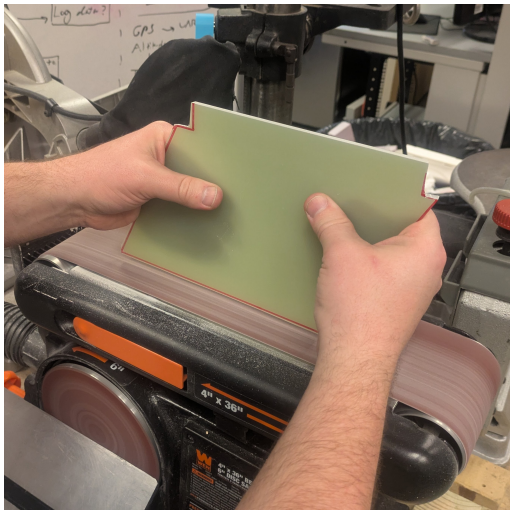

Figure 3.58: Sanding the fins to final dimension with a belt sander.



Figure 3.59: Drilling fastener holes through the fin tabs.

3.5.8 RMFS Component Construction

Centering Bulkheads Construction

The forward and aft RMFS centering bulkheads are identical and were manufactured from a 1/2 in. thick sheet of Baltic birch plywood. Drawing files derived from the CAD model were used to program tool paths for a ShopBot CNC mill. A 1/8 in. up-cut end mill tool was used on the mill to machine the slots for the fin runners and L-brackets, drill pilot holes for all fasteners, and cut the inner and outer diameters. Next, the tabs and rough edges left over from the milling process were sanded smooth. Lastly, the fastener holes were drilled out to their final diameters using a drill press.

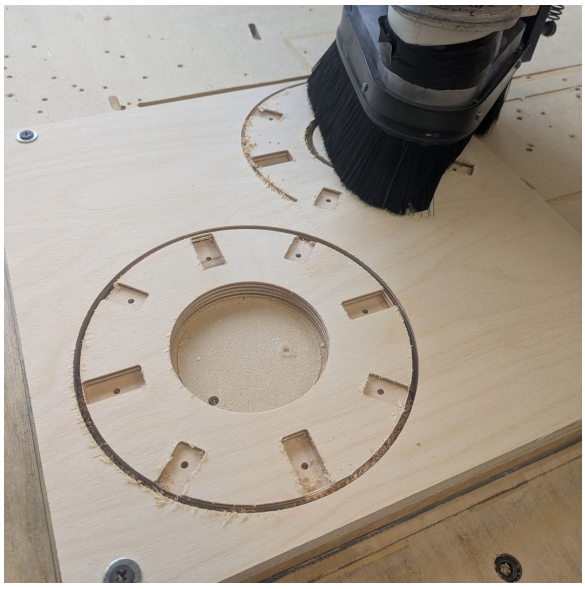

Figure 3.60: CNC milling the RMFS centering bulkheads.



Figure 3.61: Drilling the centering ring bulkhead fastener holes to final diameters.

Fin Runner Construction

The RMFS fin runners were manufactured from 1 x 1/2 in. 6061-T6 aluminum bar stock. Slightly over-sized lengths of the bar stock were first cut using a miter saw with a carbide blade. The rest of the manufacturing process was performed on a milling machine. The parts were milled to exact 9 in. lengths and faced. The channels for the fins were milled into the specified L-shaped profile and fin fastener holes were drilled. Next, the longitudinal holes at either end for mounting the runners to the centering bulkheads were drilled, chamfered, and tapped with #8-32 threads.

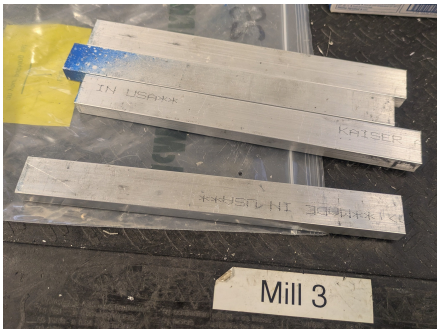

Figure 3.62: Rough cut bar stock.

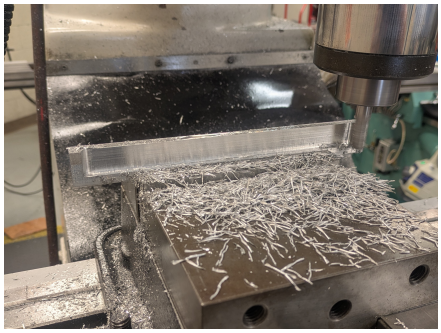

Figure 3.63: Side milling the fin runners.



Figure 3.64: Finished fin runners.

L-bracket Manufacturing

The L-brackets used to attach the RMFS to the airframe were manufactured from 3/4 in. x 3/4 in. angled aluminum extrusions. Approximately 1/2 in. lengths were cut then the ends were faced and milled to the specified length using a milling machine. Next, through holes were drilled into one face of each bracket, and a #8-32 threaded hole was machined into the perpendicular face of seven of the brackets for the airframe mounting fasteners. A 1/4-20 threaded hole was machined into one of the brackets to accept the aft rail button fastener.

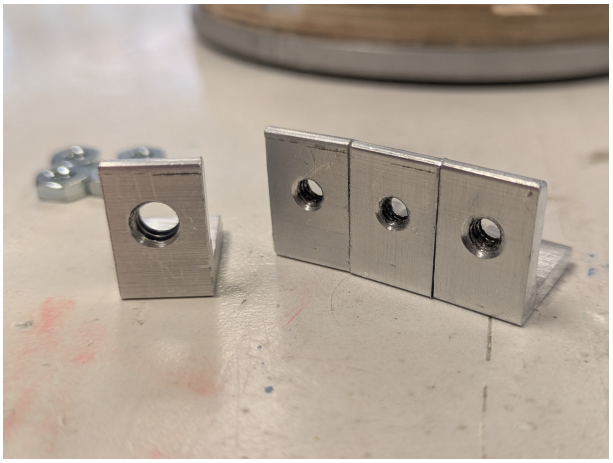

Figure 3.65: Finished L-brackets.

Thrust Plate Construction

The thrust plate was manufactured out of a 1/4 in. thick extruded 6061-T6 aluminum plate. First, a CAD model was created and a drawing file was derived from the model. Next, the overall shape and all holes were cut from the plate stock using a water-jet cutting machine in the NC State Senior Design Lab. The threaded holes for the motor retainer fasteners were chamfered and tapped using a milling machine. Lastly, any rough edges from the water-jet process were sanded smooth.

Motor Retainer Construction

The motor retainer was manufactured out of a 1/8 in. thick extruded 6061-T6 aluminum sheet. A CAD model was created and the derived drawing file was used to water-jet cut the retainer from the sheet stock. Rough edges from the cutting process were sanded smooth. The motor retainer was attached to the the thrust plate via four #8-32 machine screws.

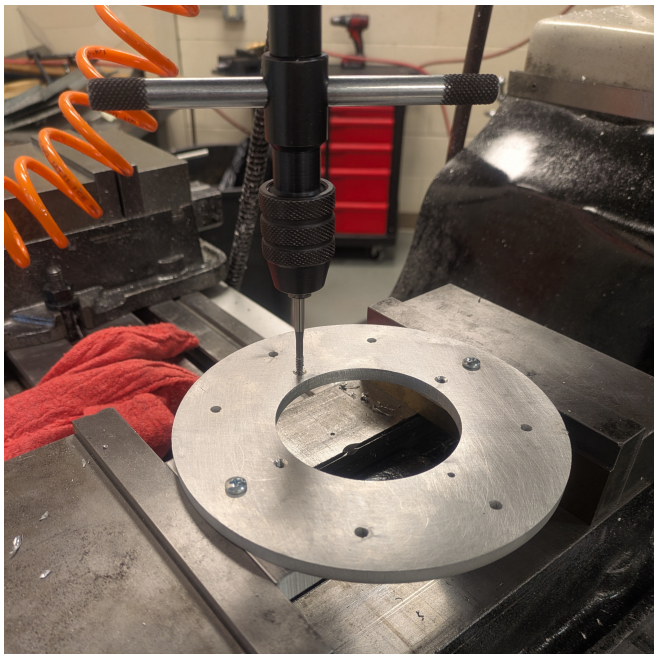

Figure 3.66: Tapping #8-32 threads into the thrust plate.



Figure 3.67: Finished motor retainer plate.

3.5.9 RMFS Assembly

The RMFS is assembled from the centering bulkheads, thrust plate, fin runners, fins, L-brackets, and motor retainer. All of these connections are fastened using #8-32 machine screws, with washers used between any wood and fastener head contact points. The fin runners are slotted into the deeper recessed slots on the centering bulkheads, and the L-brackets are positioned in the shallower slots. The component manufacturing precision is such that any similar component will fit into any of the respective holes. On the forward side of the RMFS, the fin runners and L-brackets are secured via 3/4 in. long machine screws that run through the top of the centering bulkhead. The screws fasten directly into the threaded holes of the fin runners and are secured through the L-brackets using hex nuts.

The process is similar on the aft end of the RMFS, except the thrust plate is aligned and fastened to the aft face of the aft centering bulkhead. Due to the added overall thickness, four, 1 in. long screws with hex nuts are used for the aft L-brackets. For the aft fin runners, 3/4 in. long screws are still sufficient in length. Lastly, the fins are aligned with and fastened to the fin runner channels using two 3/4 in. long screws with hex nuts. Washers are used between the fiberglass and fastener heads. All screw connections are fastened to hand-tight using a manual screwdriver.

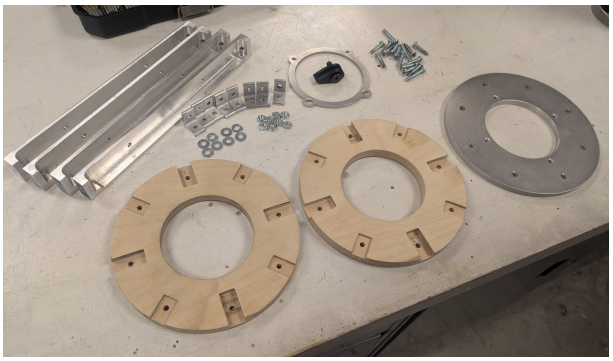

Figure 3.68: Fully disassembled RMFS, minus fins.

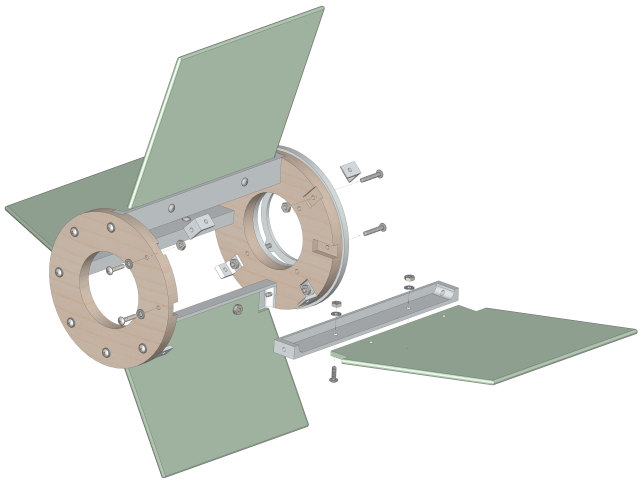

Figure 3.69: Partially exploded view of RMFS component attachment schemes.

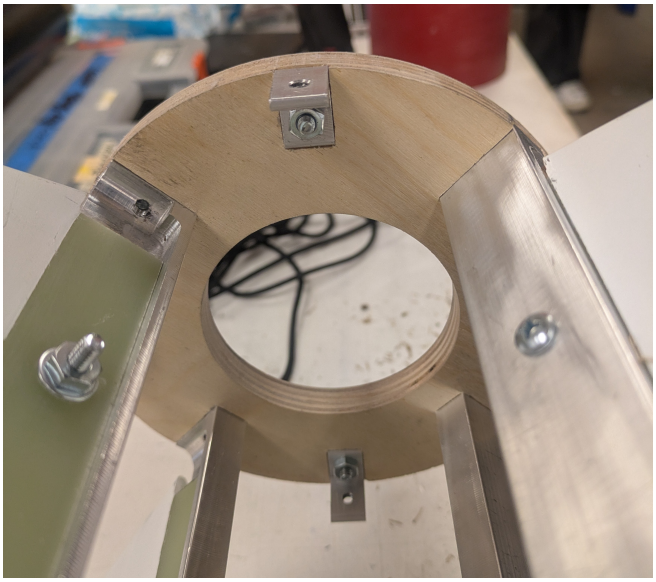

Figure 3.70: RMFS fastener connection detail.

3.5.10 Test Article Construction

The test articles for the AVAB bulkhead assembly and Nose Cone bulkhead assembly were manufactured using the same materials, processes, and hardware outlined in their respective sections above, though some adjustments were required to enable testing. For the Nose Cone bulkhead assembly, the Nose Cone body side of the bonded coupler connection was represented by a scrap piece of airframe with a bulkhead permanently epoxied into the end. This ”plug” bulkhead was made extra thick to allow for a sufficient contact area for the epoxy bond. A U-bolt was installed to allow for mounting in the Instron Universal Testing machine. For the AVAB bulkhead assembly, the threaded rod lengths were shorter than the actual rods in order to fit in the Instron machine.

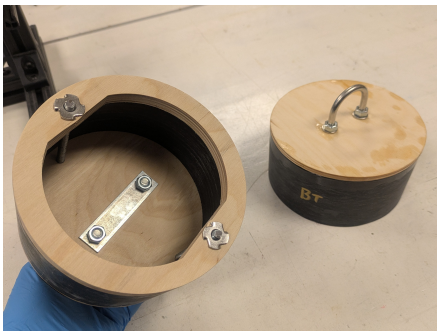

Figure 3.71: Nose Cone bulkhead assembly test article sections before bonding.



Figure 3.72: Finished Nose Cone assembly test article.



Figure 3.73: Finished AVAB bulkhead assembly test article.

For the rivet and shear pin test, a shear plate assembly was manufactured out of scrap pieces of 1/8 in. G10 fiberglass plate. Holes were drilled through both plates to allow for a rivet and shear pin. These plates served to mimic the airframe and coupler interface on the launch vehicle. Additional holes were drilled in the opposite ends of the plates to attach quick links to mount to the testing machine. Later, slots were added to allow sufficient constraint to properly test the shear pins, as the plates were prone to lateral separation during an initial round of shear pin testing.

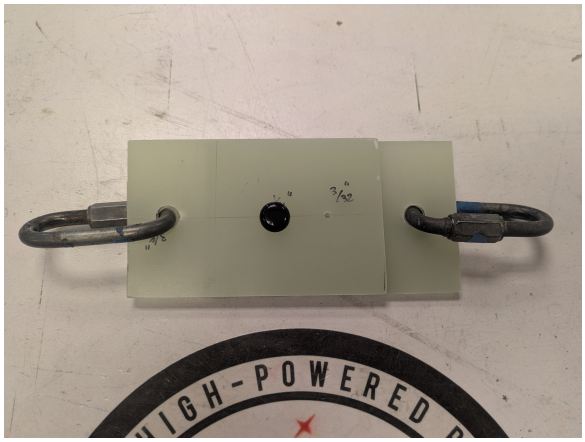

Figure 3.74: Shear plate implement for testing nylon rivets.

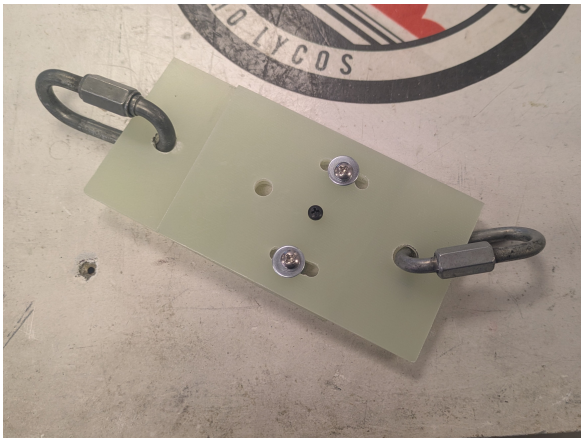

Figure 3.75: Modified shear plate implement for testing shear pins.

For the Fin Can drop test, the actual RMFS assembly, fins, motor casing, and retainer were tested, however a stand-in airframe section was used. This airframe section was a shorter version of the Fin Can airframe, and was manufactured in the same manner as the Fin Can/ Drogue Parachute bay, including the fin slots and fastener holes. This was done to allow easier positioning in the test stand and to avoid risking unnecessary damage to an expensive section of airframe, while still being able to observe impact effects.

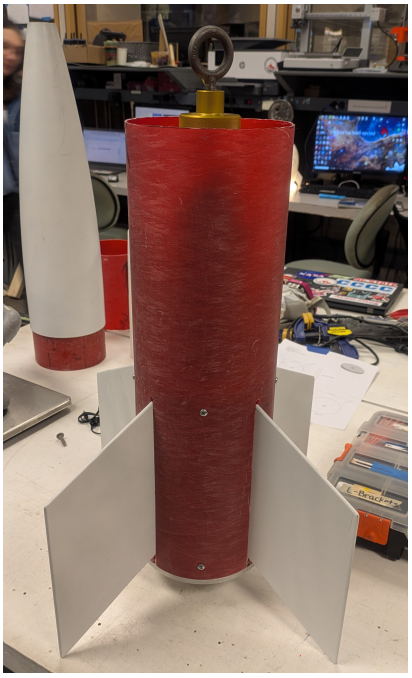

Figure 3.76: Assembled Fin Can drop testing article.

3.6 Recovery Subsystem

The recovery system is designed with two recovery events, one for drogue parachute deployment and one for main parachute deployment. The first recovery event occurs at apogee when the primary altimeter ignites the primary drogue black powder charge on the aft end of the AVAB. One second later, the secondary altimeter ignites the secondary drogue black powder charge on the aft end of the AVAB for redundancy. These black powder charges ignite and create a pressure buildup in the Drogue Bay, breaking the shear pins that connect the AVAB to the Drogue Bay, and separating the sections to deploy the drogue parachute. The Launch Vehicle then falls under the drogue parachute until the second recovery event.

The second recovery event occurs at 550 ft. when the primary altimeter ignites the primary main black powder charge at the forward end of the AVAB. At 500 ft, the secondary altimeter ignites the secondary main black powder charge at the forward end of the AVAB for redundancy. These black powder charges ignite and create a pressure build-up in the Main Parachute Bay. This breaks the shear pins

that connect the Main Parachute Bay to the Nose Cone and separates the sections to deploy the main parachute. The Launch Vehicle then falls under the main parachute for the remainder of the descent.

As a part of this design, the primary altimeter is a Perfect Flite StratologgerCF, the secondary altimeter is an Altus Metrum EasyMini, the GPS tracker is an Eggfinder Mini, the drogue parachute is a Fruity Chutes 15” Classic Elliptical parachute, and the main parachute is a 96 in. Fruity Chutes Iris Ultra Compact parachute.

3.6.1 Recovery System CONOPS

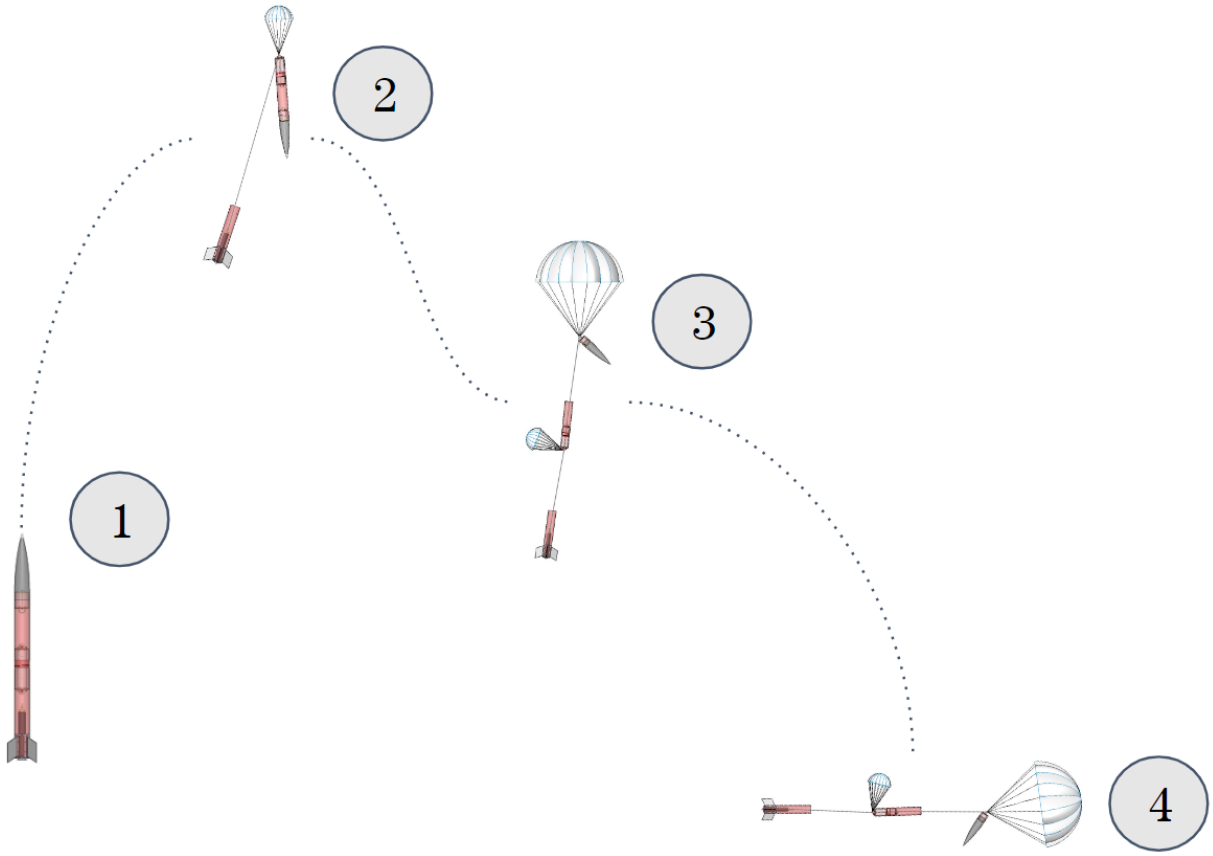

Figure 3.77: Recovery CONOPS

Figure 3.77 shows the concept of operations for the recovery system during a nominal launch. Phase 1 is the launch phase, phase 2 is drogue parachute descent, phase 3 is the main parachute descent, and phase 4 is the landing.

Before takeoff, the main and secondary altimeters are armed on the launch pad by removing the pull-pin. The team listens to the beeps to confirm that the main and secondary charges have continuity on both altimeters. The team also connects to the GPS using the receiver to confirm that it is transmitting the correct coordinates on the pad. Only after all recovery avionics devices are confirmed to be working as expected, the team is go for launch.

During flight, once the Launch Vehicle reaches apogee, the primary altimeter ignites the primary drogue deployment charge and one second later the secondary altimeter ignites the secondary drogue deployment charge. This causes the Launch Vehicle to separate at the connection between the Fin Can and the AVAB, causing the drogue parachute to deploy and inflate. The Launch Vehicle then descends under the drogue parachute oriented such that the forward end of the vehicle is at least 10 ft. above the Fin Can.

Once the Launch Vehicle has descended to 550 feet, the primary altimeter ignites the primary main deployment charge, and at 500 feet the secondary altimeter ignites the secondary main deployment charge. This causes the main parachute to be ejected from the Launch Vehicle and inflate. The Launch Vehicle then descends under the main parachute such that all sections of the Launch Vehicle have at least 10 feet of separation between them.

The vehicle then descends under the main parachute until it safely lands back on the ground. The Launch Vehicle should land undamaged, such that it could be re-flown on the same day. It should also land such that the maximum kinetic energy is below 65 ft-lb, the total descent time is below 80 seconds, and the total drift distance is under 2500 feet.

3.6.2 Parachutes

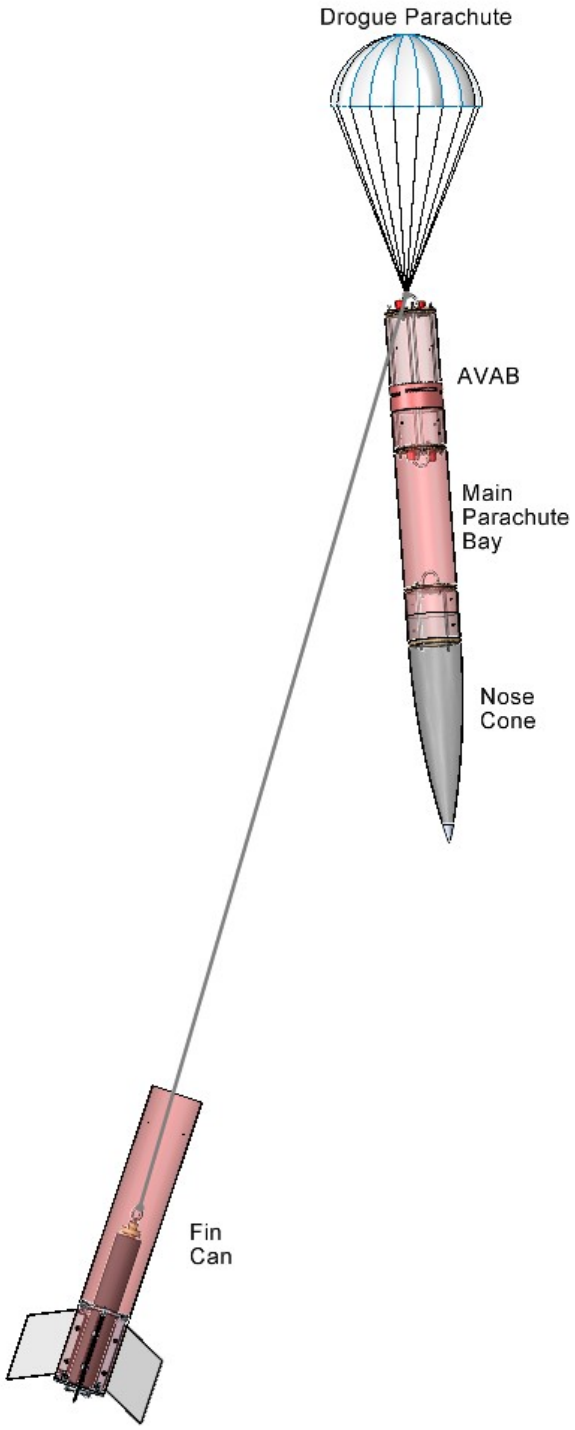

Figure 3.78: Drogue Deployment Configuration

As per NASA requirement 3.3, the maximum kinetic energy of the heaviest independent section of the launch vehicle must not exceed 75 ft-lbf at landing, and extra points will be awarded to teams that stay under 65 ft-lbf. As per NASA requirements 3.11 and 3.12, the rocket shall drift no more than 2,500 ft. from the launch pads and the overall descent time of the vehicle from apogee must be limited to 90 sec, with extra points awarded to teams who stay under 80 sec. Final parachute selections were made to ensure the launch vehicle's maximum kinetic energy at landing is under 65 ft-lbf, the overall descent time is under 90 seconds, and the vehicle will drift no more than 2,500 feet.

For the drogue parachute, the team has selected the Fruity Chutes 15" Classic Elliptical parachute. This parachute will sit in the Fin Can/ Drogue Parachute Bay, just aft of the AVAB. A Nomex blanket will act as a layer of fire, heat, and abrasion protection from the drogue ejection charges.

This is different from the 18" Fruity Chutes Classic Elliptical parachute proposed in CDR. The main proponent of this change from CDR was a change in the team's method in calculating the descent velocity of the launch vehicle. For more information on why this change was made, see Section 3.7.6. This parachute was selected because it will allow the Launch Vehicle to descend fast enough to meet drift distance and descent time requirements, while remaining under our team derived maximum drogue descent speed of 110 fps. At a burnout mass of 35.5 lbs., this brings the total descent velocity under drogue to 100.8 fps.

For the main parachute, the team has selected the 96 in. Fruity Chutes Iris Ultra Compact parachute which will be protected by a parachute deployment bag. This parachute will sit in the Main Parachute Bay, forward of the AVAB. The parachute deployment bag will help ensure a successful parachute deployment by organizing and holding the canopy and shroud lines until the point of ejection. The shroud lines will be z-folded and stowed within straps on the outside of the parachute deployment bag, allowing the lines to fully extend as the parachute is deployed, significantly reducing the chances of shroud line entanglement. Like the Nomex blanket, the parachute deployment bag will also protect the parachute from fire, heat, and abrasion from the main ejection charges.

This main parachute was chosen because the team already owns one and, when used in tandem with the 15" drogue parachute, the Launch Vehicle will remain under 65 ft-lbf of kinetic energy at landing while still reaching the ground in under 80 sec for bonus points on both requirements. The descent velocity under the main parachute is 16.6 fps. This configuration also ensures the Launch Vehicle will not drift more than 2500 ft. from the launch pad during its descent. For more specific information on how these values were calculated and verified, see Mission Performance Predictions Section 3.7.6, Section 3.7.7, and Section 3.7.8.

Parachute Opening Shock Calculations

The largest force that will act on the shock cord is caused by the main parachute deployment when the descent velocity decreases from 100.8 fps to 16.6 fps. This change in velocity happens extremely quickly as a result of the main parachute deployment. The amount of

time it takes to deploy the parachute can be calculated with the equation

$$t = \frac{8r}{v_d} \tag{1}$$

where t is the time it takes the main parachute to open, r is the radius of the parachute, and v_d is the descent velocity of the vehicle under drogue. For the 96" Iris parachute at a drogue descent rate of 100.8 fps, the main parachute deployment time was calculated to be 0.317 sec. With the main parachute deployment time, the total shock force experienced by the shock cord can be calculated with the equation

$$F = \frac{m\Delta v}{t} \tag{2}$$

Using 35.5 lbm for the vehicle descent mass mass, 84.2 fps for change in velocity, and 0.317 sec for parachute deployment time, the maximum force the shock cords will experience is 292.8 lbf.

Main Parachute Deployment Configuration

Figure 3.79 shows the as-built deployment configuration for the main parachute inside the Main Parachute Bay.



Figure 3.79: Main Parachute Deployment Configuration

This image shows how the main parachute and main parachute shock cords are attached within the Main Parachute Bay. The bottom shock cord is the main parachute shock cord which is 192 inches and connects the Nose Cone and AVAB sections directly together.

The main parachute is contained within a parachute deployment bag and connected directly to the Nose Cone U-bolt using a quick link. A 24 inch section of shock cord is used to connect the main parachute deployment bag to the AVAB U-bolt to hold the deployment bag in place during main parachute deployment.

3.6.3 Shock Cord

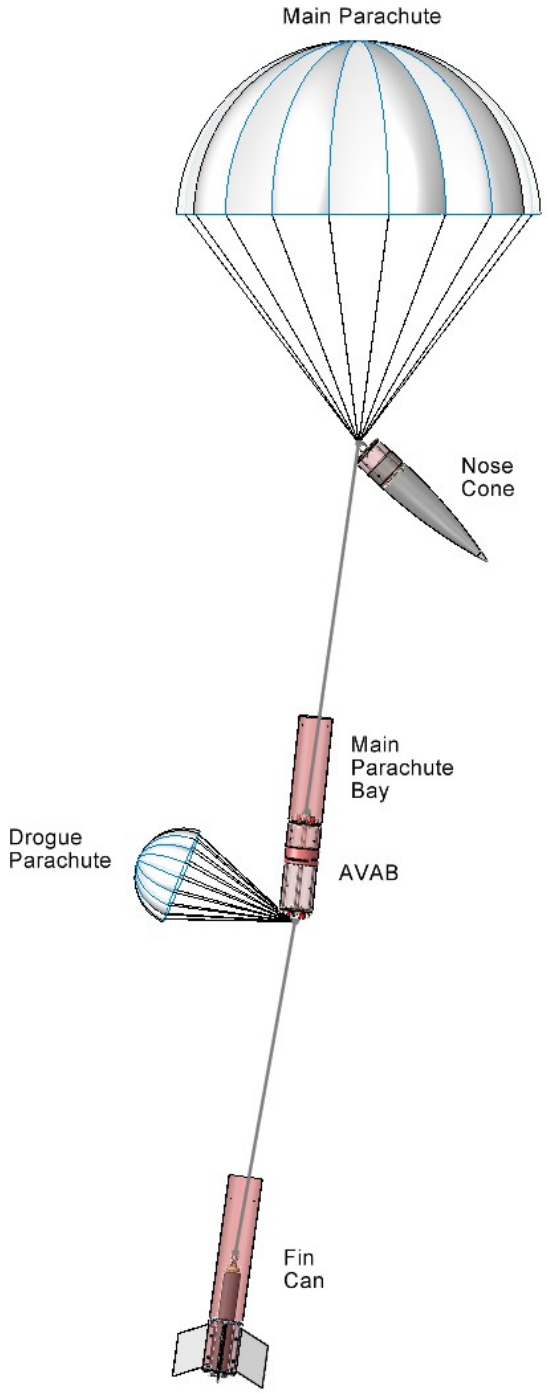

Figure 3.80: Main Deployment Configuration

For the shock cords, the team is using 5/8 in. Kevlar shock cord. Kevlar shock cord is a great option because it is extremely strong and heat resistant. The 5/8 in. shock cord has a maximum strength rating of 6600 lbs, providing a factor of safety of 22.5. Although this is much higher than necessary considering the forces the shock cord will be under, the team already owns it, so it does not require any additional cost.

A diagram of the complete drogue parachute arrangement is shown in Figure 3.78. After the first recovery event at apogee, the Launch Vehicle separates into two sections, with the separation point between the AVAB and the Drogue Parachute Bay. The shock cord is tied onto a quick link attached to the AVAB U-Bolt using a bowline knot. The drogue parachute is also attached directly to this quick link. Attaching the drogue parachute directly to the aft end of the AVAB reduces the chance that the forward end of the Launch Vehicle gets tangled in the shock cord during descent, increasing the chances of a successful main parachute deployment. The other end of the shock cord is tied to a different quick link using a bowline know that is connected to the eyebolt secured within the motor casing.

The overall length of the drogue shock cord is 216 in. This arrangement allows the Launch Vehicle to descend under the drogue parachute in two sections without them clashing together because there is approximately ten ft. of vertical separation between the two sections on descent. Additionally, this configuration puts the Main Parachute Bay above the Fin Can to ensure that the main parachute does not get tangled in the Fin Can upon deployment.

After the second recovery event at 550 ft. above ground level, the forward section of the Launch Vehicle containing the AVAB, the Main Parachute Bay, and the Nose Cone separates into two sections between the Main Parachute Bay and the Nose Cone. The Launch Vehicle will then begin to descend under the main parachute as shown in Figure 3.80. Like the drogue parachute, the shock cord is tied onto a quick link attached to the AVAB U-Bolt using a bowline knot and the other side of the shock cord is tied onto a separate quick link which is attached to the Nose Cone bulk head. The main parachute is connected directly to the same Nose Cone quick link as the shock cord.

The overall length of the main shock cord is 192 in. Like the drogue shock cord, this arrangement allows the Launch Vehicle to descend under the main parachute with all sections separated by at least 10 ft. to avoid clashing during descent.

During flight, the Launch Vehicle is held together by four 4-40 nylon shear pins at each separation point. Each shear pin is rated for 2.5 psi of force, which has been experimentally verified by our team. The shear pins are strong enough to hold the Launch Vehicle together during flight, but weak enough to shear and separate the Launch Vehicle from the forces caused by the ejection charges.

3.6.4 Structural Components

Figure 3.81 shows an example of how the shock cords are attached to each of the sections of the launch vehicle.

The launch vehicle sections are tethered together using 5/8 in. Kevlar shock cord. The shock cord is tied onto zinc-plated steel quick links using bowline knots and those quick links are directly attached to 5/16 inch zinc-plated steel U-bolts.



Figure 3.81: Shock Cord Attachment System

The 5/8 inch Kevlar shock cord is rated to 6600 pounds. Cutting the shock cords and attaching them to the quick links using bowline knots reduces their strength by 40%, giving the shock cord attachments a strength rating of 3960 pounds. The 5/16 U-bolts are rated to 1300 pounds. As covered in Section 3.4, the bulkheads assemblies were tested to loads exceeding 1300 pounds without failure. The weakest quick links used in the recovery system are 1/4 inch zinc-plated steel. At a strength rating of 880 pounds, they provide the lowest factor of safety in the recovery system at 3.0.

3.6.5 Ejection Charges

The ejection charges necessary to separate the Launch Vehicle during recovery events have been selected for 777 grade FFF black powder. This grade of black powder was chosen because the fineness of the grain leads to a faster combustion compared to that of larger grain sizes. In turn, this creates a more rapid pressurization of the bay and a cleaner separation event. Two primary and two redundant secondary charges will be housed in 3D printed blast caps on the outer surface of the AVAB bulkheads.

The mass of the black powder charges are calculated using the ideal gas law

$$m = \frac{PV}{RT} \tag{3}$$

where m is the mass of the black powder, P is the pressure required to separate the section, V is the volume of the section, R is the gas constant for black powder, and T is the temperature of the gas produced by the black powder combustion.

The volume of the bay is determined by taking the empty space within the bay and subtracting the volume of the parachute and other recovery hardware. The shear pins used on the vehicle are rated for 2.5 psi. Thus, a pressure of at least 10 psi is required to separate the vehicle. Due to the presence of friction, as well as variation in the shear pins, a factor of safety of 1.5 is applied to the ejection charge pressure, making the required pressure to perform recovery events 15 psi.

A secondary ejection charge is also used as a backup for both the main and drogue separation events. The pressure produced by the secondary ejection charge will be increased by 25%, bringing it up to 18.75 psi. This ensures separation in the event of failure to separate from the primary charge.

Table 3.4 below outlines the calculated primary and secondary charges for the main and drogue parachute deployment events.

Table 3.4: Ejection Charge Sizing

Separation Event	Volume of Section	Primary Charge Mass	Secondary Charge Mass
Drogue Parachute Deployment	355.67 in^3	2.8 g	3.5 g
Main Parachute Deployment	390.38 in^3	3.1 g	3.8 g

These ejection charge values were verified using Chuck Pierce's Black Powder Ejection Charge Calculator.

As per NASA Requirement 3.2, a ground ejection test was performed to confirm the sizing of the primary ejection charges prior to launch. For this, the launch vehicle was configured to its final launch day configuration and the separation events were tested on the ground. The drogue and main charges separated the vehicle without any issues during ejection testing, as well as during the Vehicle Demonstration Flight.

3.6.6 Avionics

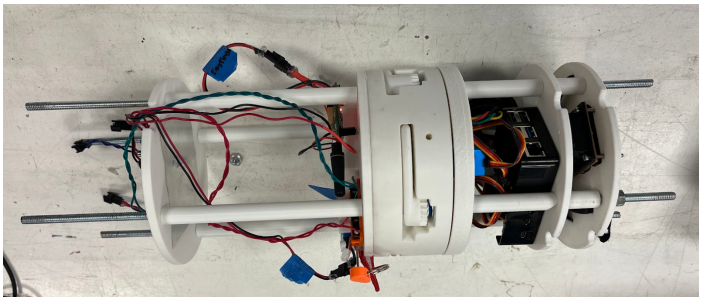

Figure 3.82: Full AVAB Assembly

Figure 3.82 above shows the complete AVAB, containing all the avionic electronics integral to the recovery subsystem (left), as well as the full Air Brakes payload (right). More information on the Air Brakes system can be found in Section 6.1.6.

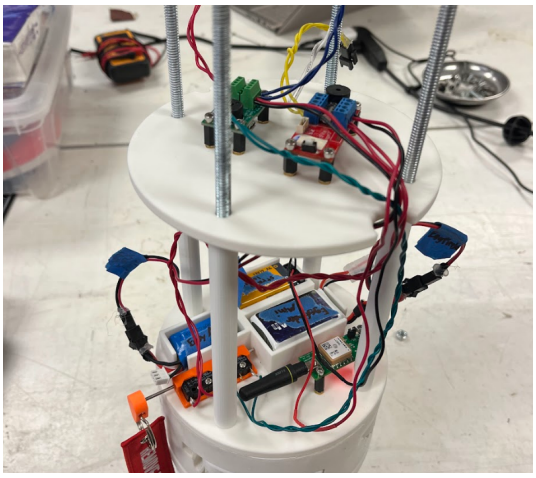

Figure 3.83: AV Sled

Figure 3.83 above shows the finalized AV Sled. As shown, the AV Sled sits in the forward section of the AVAB, isolated from any other Air Brakes or Payload Electronics. The AV Sled was 3D printed using PLA filament.

The top plate holds the Perfect Flite StratologgerCF altimeter and the Altus Metrum EasyMini altimeter. The altimeters are secured to the plate using M2.5 standoffs and M2.5 screws slotted into heat inserts embedded into the filament. The open slits on the sides of the plate allow the wires to run down and connect to the batteries on the bottom plate.

The bottom plate holds the Eggfinder Mini, the Double Pull Pin Switch (which contains two micro switches), one 9V alkaline battery, one 7.4V 1000 mAH LiPo battery, and one 7.4V 400 mAh LiPo battery. Each of the altimeters is powered by separate batteries on independent circuits that are separate from all other payload and Air Brakes electronics.

The flat plate design allows for 5 in. of separation between the recovery altimeters and the Eggfinder Mini, which is the nearest frequency transmitting device. This flat plate design also allows for 6.68 in. of separation between the top of the Air Brakes servo and altimeters. The base of the top AV Bay plate has also been lined with aluminum foil for further signal shielding.

Altimeters

The team is flying a PerfectFlite StratologgerCF as the primary altimeter, with an Altus Metrum EasyMini acting as the secondary backup altimeter. With size being a major priority for this year's AV Bay components, particularly for Subscale, these two altimeters offered outstanding performance relative to their size and fulfill all NASA and team derived requirements. The primary altimeter will be used for the purpose of reporting competition altitude.

The StratologgerCF is powered by a single 9V alkaline battery, as per manufacturer recommendations. With an average current draw of 1.5 mA, a single 9V battery should be able to power the StratologgerCF for more than 300 hours. During testing, the 9V battery powered the StratologgerCF for 8 hours without any issue. The test was concluded after 8 hours due to time limitations, not due to any issues with the altimeter or battery.

The Altus Metrum EasyMini is powered by a 7.4V 400 mAh LiPo. With an average current draw of 8 mA, this battery should be able to power the EasyMini for around 50 hours. During testing, the 7.4V 400 mAh battery powered the EasyMini for 8 hours without any issues. Like the StratologgerCF, the test was concluded after 8 hours due to time limitations, not due to any issues with the altimeter or battery.

Altimeter Arming Method

To arm and disarm the altimeters, the team is using a Lab Rat Rocketry Double Pull pin switch that sits on the switchband. The double pull pin switch has two micro switches that are aligned so that one pull pin can be used to turn on both switches. On the launch pad, the team begins avionics procedures by removing the pull pin only half way so that only the EasyMini is armed. After the EasyMini is verified to be working as expected, the pull pin is fully removed to arm the Stratologger. Since the Stratologger beeps much louder than the EasyMini, this process makes it easier to diagnose any altimeter problems on the launch pad.

While the external frame of these switches makes them appear as one unit, each switch acts completely independently of the other, and each of the altimeters can be armed and disarmed independently using a single pull pin.

Trackers

The tracker flown in this year's competition launch is the Eggfinder Mini GPS. This tracker was chosen primarily for its extremely small size and affordable price, all while still having more than enough transmitting range to encompass the entire launch field.

The Eggfinder Mini transmitter is paired with a handheld Eggfinder LCD Receiver held by the recovery lead on the ground during flight. There is no switch to turn the Eggfinder Mini on or off, and it is turned on as soon as it is plugged in during assembly. This design was chosen because during preliminary testing the GPS often took between 5 to 15 minutes to connect to get a satellite fix and the team did not want those delays on the launch pad.

The location of the vehicle is transmitted to the receiver continuously until the Launch Vehicle is recovered and the GPS is deactivated. The tracker is configured to transmit at 919 MHz, ID 7. It operates at an output power of 100 mW and has a line-of-sight operating range up to 5 miles.

The Eggfinder Mini is powered by a 7.4V 1000 mAh LiPo. With an average current draw of 70 mA, this battery should be able to power the EasyMini for more than 14 hours. During testing, the 7.4V 1000 mAh battery powered the EasyMini for 8 hours without any issues. Like the altimeters, the test was concluded after 8 hours due to time limitations, not due to any issues with the GPS or battery.

Electrical Schematics

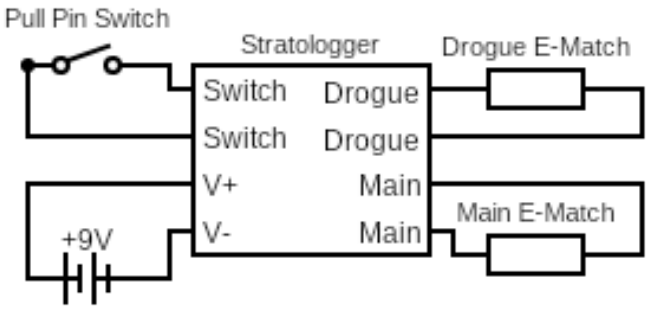

Figure 3.84: Primary Altimeter Wiring Diagram

Figure 3.84 above shows the wiring diagram for the primary altimeter. This circuit is independent from all other avionics electronics and is powered by a manufacturer recommended 9V battery. The StratologgerCF has two terminal blocks mounted on its PCB. Solid core wire is clamped down into these terminal blocks to make all the necessary electrical connections to the altimeter. The board also has a built-in switch that one of the micro switches is connected directly to, as shown in the diagram.

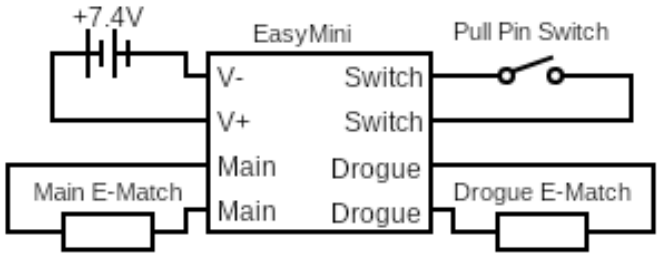

Figure 3.85: Secondary Altimeter Wiring Diagram

Figure 3.85 above shows the wiring diagram for the secondary altimeter. The circuit is independent from all other avionics electronics and is powered by a manufacturer recommended 7.4V 400 mAh LiPo battery. Like the Stratologger, the EasyMini has two terminal blocks mounted on its PCB that solid core wire is clamped down into to make all the electrical connections to the altimeter. The board also has a built-in switch that one of the micro switches is connected directly to as shown in the diagram.

The Eggfinder Mini is connected directly to a 7.4V 1000 mAh battery. The Eggfinder Mini is not connected to a switch and is powered on as soon as it is plugged in during AV Sled assembly. As mentioned previously, this design choice was made because it can take up to 15 minutes for the GPS to connect to a satellite which is not ideal to do on the launch pad while arming the altimeters.

Connectors

JST SM connectors are crimped onto the ends of all the wires used within the AV Bay. These JST connectors make it easy to plug the batteries into the avionics electronics without having to constantly screw and unscrew the terminal blocks to complete the circuits.

To easily connect the e-matches to the altimeters, terminal blocks with color coded JST connectors are affixed to the exterior of the AVAB bulkheads. Figures 3.86 and 3.87 show an example of how the AVAB bulkheads are assembled.



Figure 3.86: AVAB Bulkhead Top View

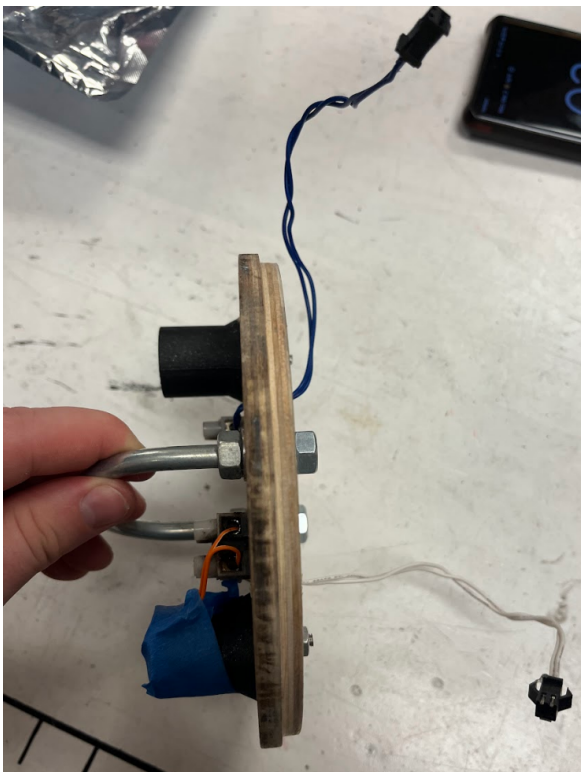

Figure 3.87: AVAB Bulkhead Side View

The orange wire is the e-match that is screwed into the terminal block. The white wire is screwed into the other side of the terminal block and is wired through the bulkhead with a male JST connector on the other end of the wire. This white JST connector plugs into the white female JST connector connected to the primary altimeter. All four black powder charges use different colored wires to make them easy to differentiate during assembly on launch day.

This system allows the team to leave the e-matches completely disconnected from the altimeters during assembly and easily connect them once the AV Sled and Air Brakes are fully assembled, prepped, and inserted into the AVAB coupler section.

Avionics Sensitivity to Electromagnetic Fields

The Perfect Flite StratologgerCF and the Altus Metrum EasyMini both rely on barometric pressure sensors and accelerometers to detect and trigger recovery events. While these sensors are not typically affected by radio frequency transmissions, strong electromagnetic fields could cause interference with their data processing and recovery event triggers.

The Eggfinder Mini transmits at 900 MHz and operates on just 100 mW of power. While the electromagnetic frequencies emitted by this should be relatively small, close proximity to the altimeters could introduce noise and cause malfunctions. This concern was the primary driving factor behind the 5 inches of separation between the bottom AV Sled plate containing the Eggfinder Mini and the top AV Sled plate containing the altimeters (see Figure 3.83). In addition to the separation between the plates, the bottom of the top altimeter plate was lined with aluminum shielding to further protect the altimeters from electromagnetic interference produced by the Eggfinder Mini and the Air Brakes electronics.

3.7 Mission Performance Predictions

3.7.1 Launch Day Target Altitude

The target altitude for this vehicle is 4600 ft above ground level. Predicted altitude is 4606 ft above ground level, requiring that the air brakes system drops the target altitude by up to 6 ft. As proven in test flights, this is well within the capability of the air brakes system. Various simulation softwares confirm this prediction and that it will be within the realm of air brake capability. These calculations are subject to average weather conditions of 10 mph.

Table 3.5: Apogee Prediction Across Software Suites

Software	Predicted Apogee
OpenRocket	4664 ft.
RasAero II	4863 ft.
RocketPy	4606 ft.

Altitude Verification

To verify the altitude calculations, the Fehskens-Malewicki equations are utilized.

Drag force is calculated:

$$k = \frac{1}{2}\rho C_d A \tag{4}$$

Variable q is calculated:

$$q = \sqrt{\frac{T - Mg}{k}} \tag{5}$$

A ratio of drag force and variable q is calculated:

$$x = \frac{2kq}{M} \tag{6}$$

Maximum velocity is calculated:

$$v_{max} = q\frac{1 - e^{-xt}}{1 + e^{-xt}} \tag{7}$$

Motor burnout altitude is calculated:

$$Z_{burnout} = -\frac{M}{2k}\ln\left(\frac{T - Mg - kv_{max}^2}{T - Mg}\right) \tag{8}$$

Coast distance is calculated:

$$Z_{coast} = \frac{m \ln\left(\frac{mg+kv^2}{mg}\right)}{2k} \tag{9}$$

Last, apogee is estimated:

$$Z_{apogee} = Z_{burnout} + Z_{coast} \tag{10}$$

The above derivation yielded the values in Table 3.6 below.

Table 3.6: Apogee Calculation Constants and Results

Constant	Variable Name	Value	Units
M	Power On Average Mass	1.17	Slug
m	Power Off Average Mass	1.1	Slug
g	Gravitational Acceleration	32.174	fps^2
t	Motor Burn Time	2.4	s
T	Average Thrust	352.46	lbf
ρ	Air Density	0.002377	$slug/ft^3$
A	Launch Vehicle Frontal Area	0.2076	ft^2
C_d	Drag Coefficent	0.4	NA
Equation	**Result**		**Units**
k	0.000099		slug/ft
q	1786.02		ft^2/s^2
x	0.3013		fps^2
v_{max}	619.03		fps
$Z_{burnout}$	758.76		ft
Z_{coast}	4047.104		ft
Z_{apogee}	4795.86		ft

Due to various approximations in this calculation, the yielded value is higher than the predicted altitudes. There is a 4 percent difference between this calculation and the RocketPy prediction, which demonstrates confidence in the simulation.

3.7.2 Air Brake Impact on Mission Performance

As shown below in Figure 3.88 the air brake module will reduce apogee from predicted to target in flight. This simulation was run at 10 mph winds. At lower wind speeds, apogee will increase and air brakes will have a more significant impact.

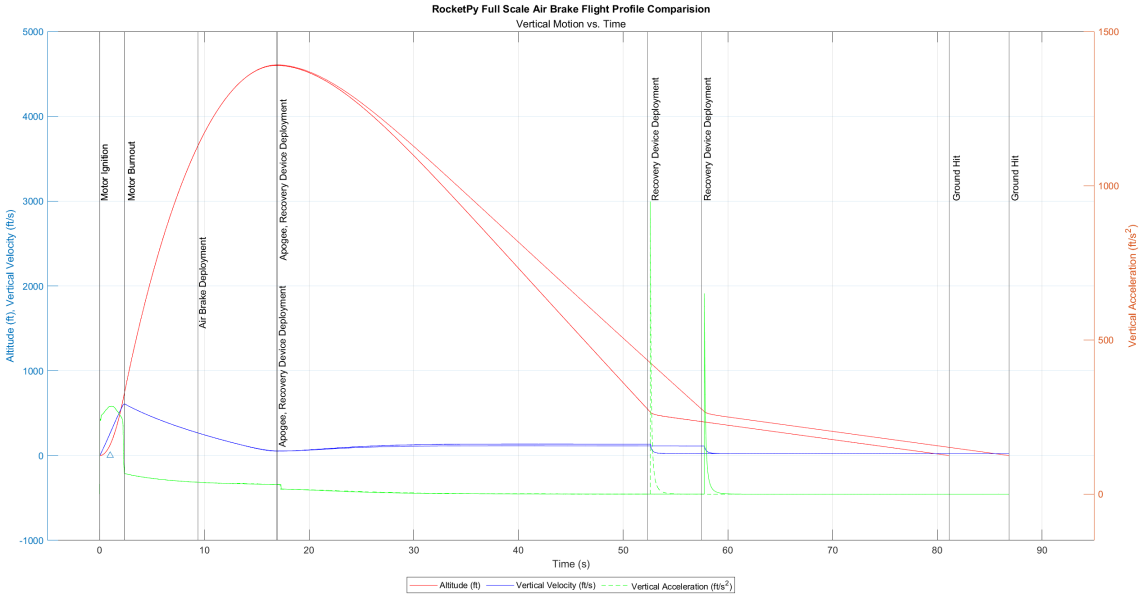

Figure 3.88: Flight Profile, Air Brakes Impact

3.7.3 Flight Profile Simulations

Flight profile simulations from Open Rocket, RAS Aero II, and RocketPy are shown in the figures below. These flight profiles are similar and as expected. These are simulated with a 12 foot launch rail at a 5 degree cant with a wind speed of 10 mph. The impact of wind speed is addressed in Table3.7, below. Based on these calculations, there is concern about not meeting target apogee if wind speed is above 10 mph, which is due to mass changes since the target was declared. Further, air brake impact will be more significant at lower wind speeds.

According to these simulations, the vehicle will reach a rail exit velocity of 70.6 fps, and gain a maximum velocity of 609.6 fps or 0.54 mach.

Table 3.7: Apogee Prediction at Different Wind Speeds (RocketPy)

Software	Predicted Apogee
0 mph	4652 ft.
5 mph	4640 ft.
10 mph	4606 ft.
15 mph	4548 ft.
20 mph	4469 ft.

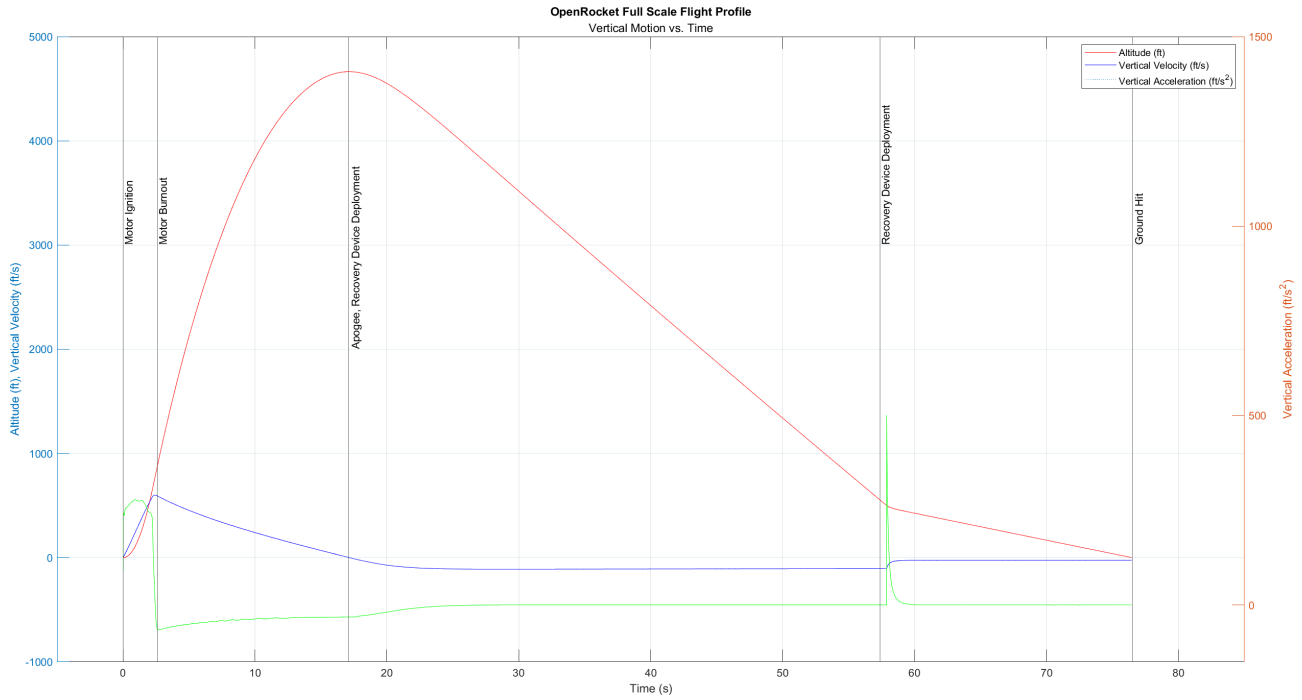

Figure 3.89: Flight Profile, Open Rocket

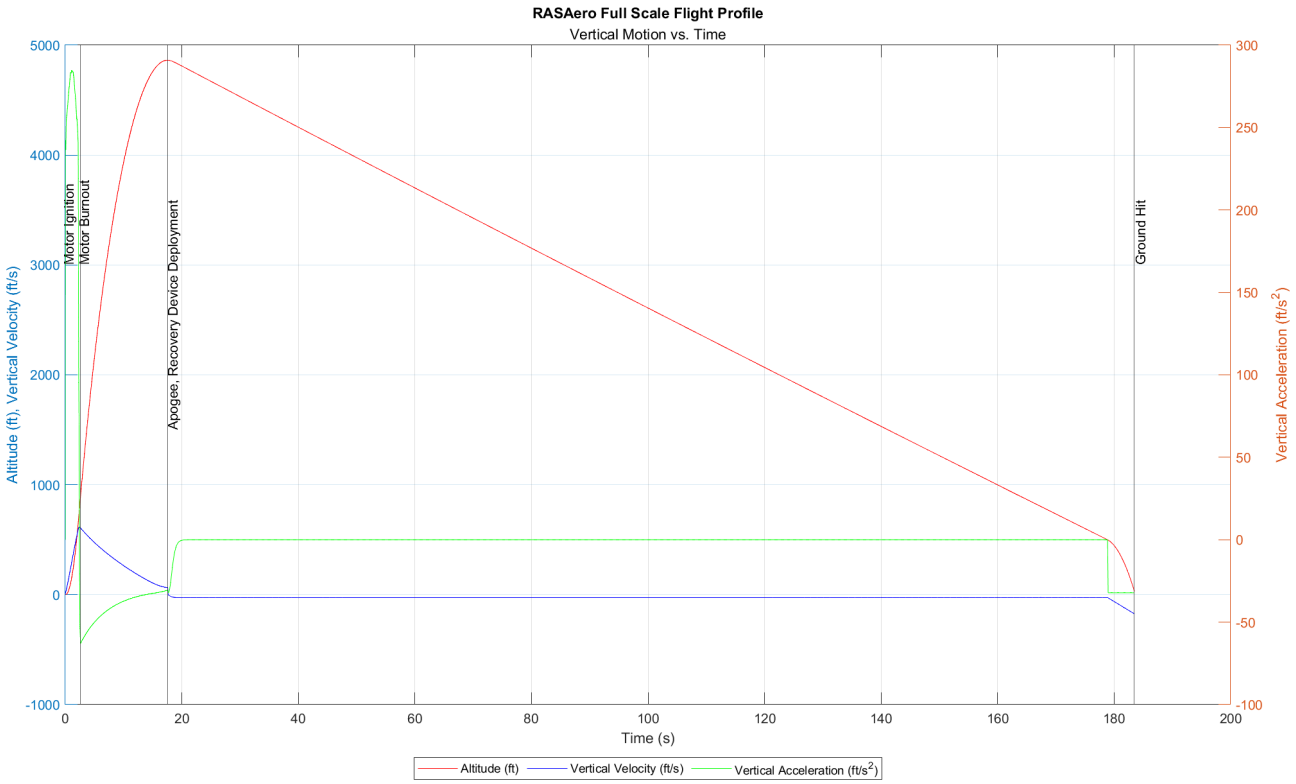

Figure 3.90: Flight Profile, RASAero II

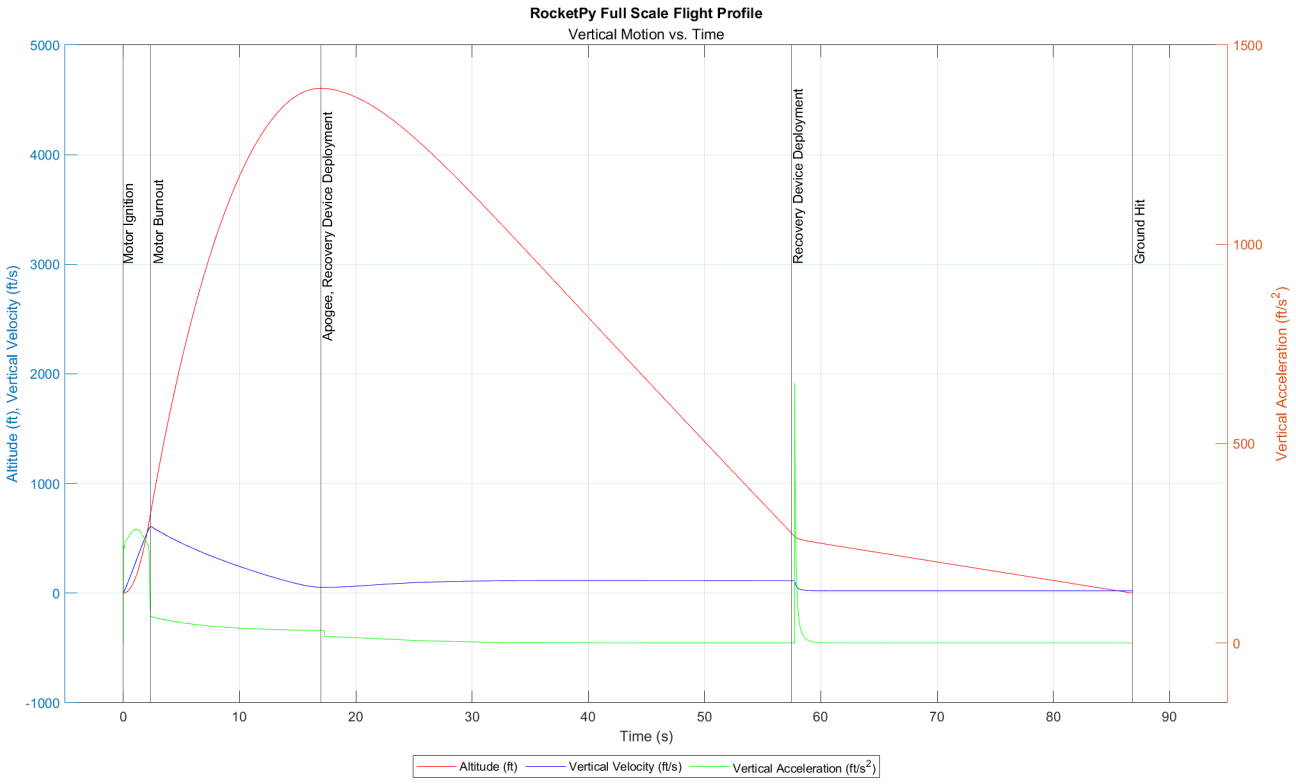

Figure 3.91: Flight Profile, RocketPy

Component Weights

The component weights used to complete these simulations are listed below in Table 3.8. These are based on the measured VDF masses. However, this accounts for the change in ballast to the predicted competition ballast of 0.46 lbs.

Table 3.8: Predicted Component Weights

Vehicle Section	Predicted Mass
Nose Cone/Payload Bay	7.90 lbs.
Main Parachute Bay	5.90 lbs
AVAB	7.60 lbs
Drouge Parachute Bay/Fin Can (Wet Mass)	18.28 lbs.

Simulated Motor Thrust Curve

Figure 3.92, below, shows the simulated thrust curves for both the primary and secondary competition motors. The L1520T is the primary motor and will be used for the competition launch.

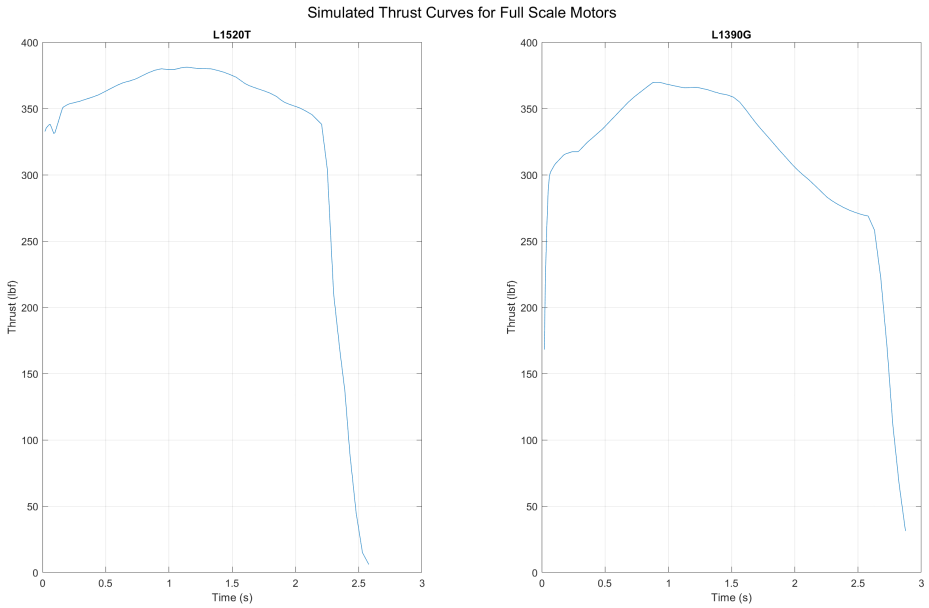

Figure 3.92: Simulated Motor Thrust Curves

The calculated thrust to weight provided by the motor and velocity off the rail are displayed in Table 3.9, below.

Table 3.9: Motor Specifications

Motor	Thrust to Weight Ratio	Velocity off Rail
L1520T	8.75	78.5 ft/s
L1390G	7.89	74.9 ft/s

3.7.4 Stability Margin

Stability is calculated using multiple simulation software programs to increase confidence in the calculation. Table 3.10, below, displays the center of pressure and center of gravity these software programs use to calculate stability. RocketPy, the highest fidelity software, yields a stability of 2.028 calibers.

Table 3.10: Stability Margin Determination Across Software Suites

Software	Center of Pressure	Center of Gravity	Stability Margin
OpenRocket	70.05 in.	57.75 in.	2.0 Calibers
RasAero II	69.94 in.	57.75 in.	2.0 Calibers
RocketPy	67.80 in.	57.24 in.	2.0 Calibers

The figures below display visual representations of the stability, center of gravity, and center of pressure in the vehicle. Center of pressure is represented by the red dot and center of gravity is represented by the blue and white circle.

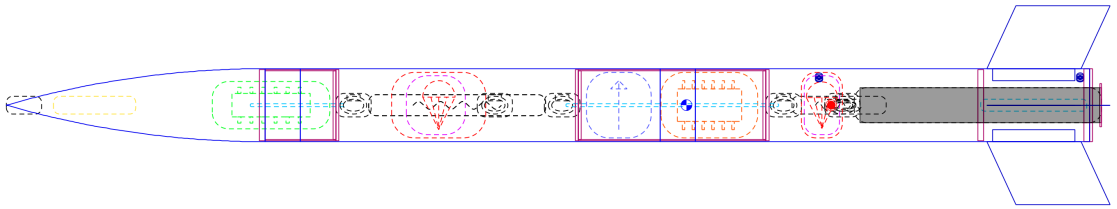

Figure 3.93: Launch Vehicle, Open Rocket

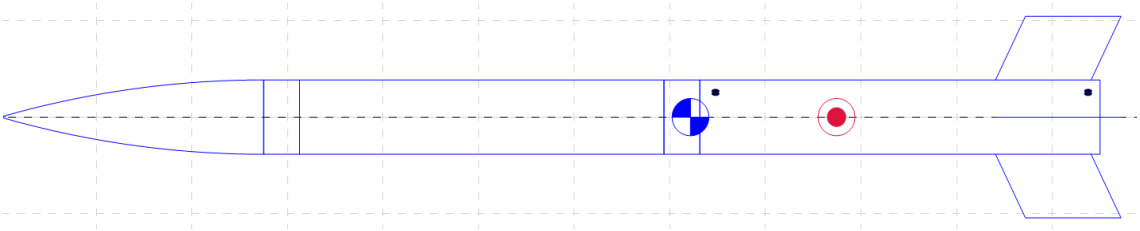

Figure 3.94: Launch Vehicle, RASAero II

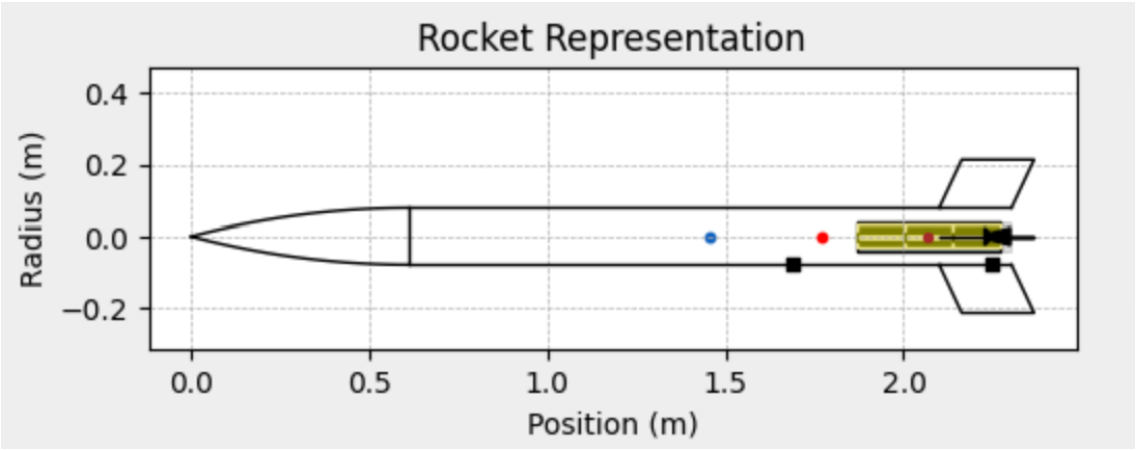

Figure 3.95: Launch Vehicle, RocketPy

After motor burnout, the center of gravity must be forward of the air brake protuberances in order to safely utilize air brakes. This has been verified through both simulations and experiments to meet NASA Requirement 2.15. On the pad, CG is 57.27 inches from the tip of the Nose Cone, which is located behind the air brakes slots. However, after burnout, it shifts to 55.0 inches from the tip of the Nose Cone. The air brake location on the vehicle is 57 inches from the tip of the Nose Cone. Figure 3.96, below, demonstrates this shift during flight and provides a visual for requirement satisfaction.

Table 3.11: Center of Gravity Location in Comparison to Air Brake Protuberances

CG	Location
Static	57.27 in.
After Burnout	55 in.
Air Brake Protuberance	57 in.

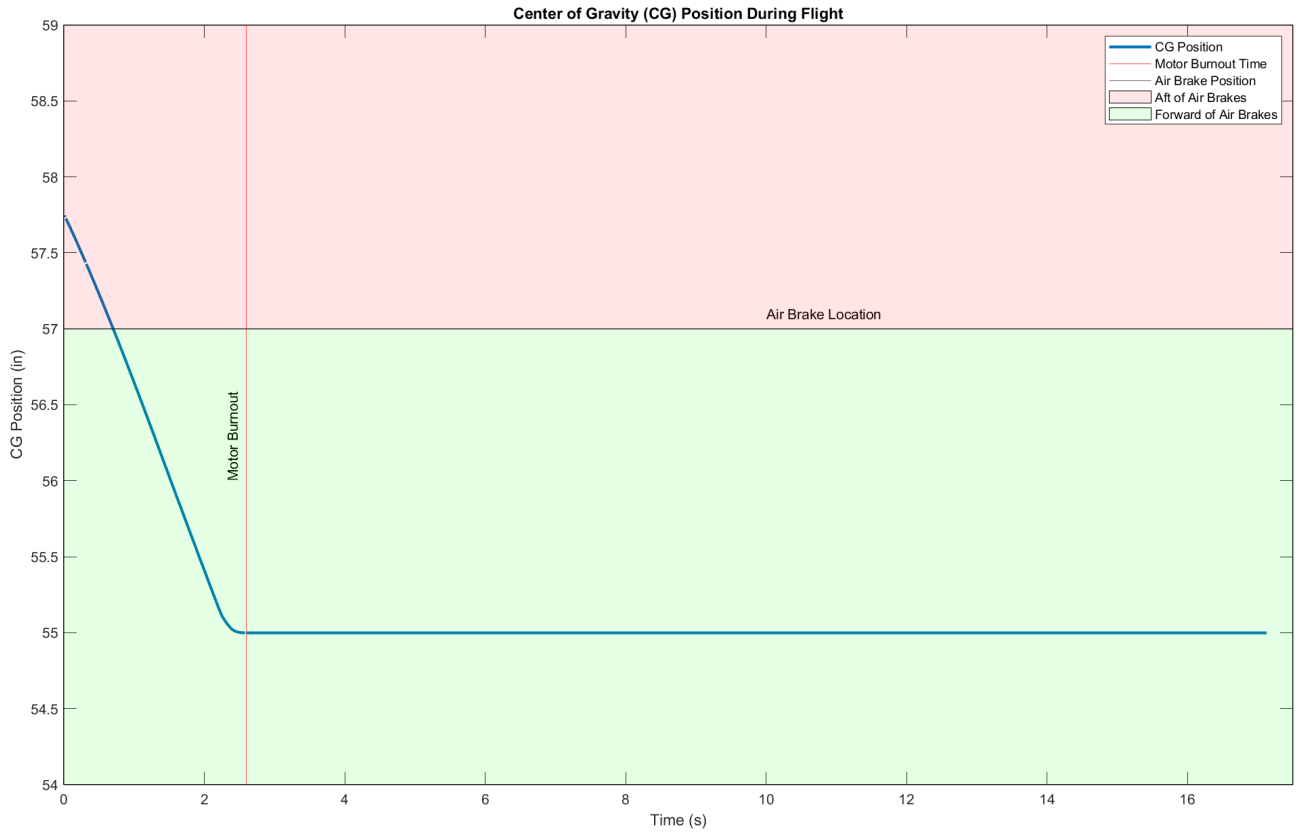

Figure 3.96: Center of Gravity During Flight

Verification of Center of Pressure, Center of Gravity, and Stability

In order to verify the Center of Pressure, Center of Gravity, and Stability calculations, the Barrowman equations are used. The derivation is as follows.

$$(C_{N_f}) = \left[1 + \frac{R}{S+R})\right] \left[\frac{4N(\frac{S}{d})^2}{1+\sqrt{1+(\frac{2L_F}{C_R+C_T})^2}}\right] \tag{11}$$

$$X_f = X_B + \frac{X_R(C_R+2C_T)}{3(C_R+C_T)} + \frac{1}{6}\left[(C_R+C_T-\frac{C_RC_T}{C_R+C_T}\right] \tag{12}$$

$$X_{CP} = \frac{C_N X_N + C_F X_F}{C_N + C_F} \tag{13}$$

$$SM = \frac{X_{CP} - X_{CG}}{2R} \tag{14}$$

Table 3.12: Stability Margin Constants and Results

Constant	Variable Name	Value	Units
$(C_N)_N$	Nose Cone Coefficient	2	NA
X_N	Nose Cone Length Factor	11	in.
R	Body Radius	3.085	in.
S	Fin Span	5.3	in.
N	Number of Fins	4	NA
d	Base of Nose Diameter	6.17	in.
L_F	Fin Midchord Line Length	5.85	in.

Table 3.12: Stability Margin Constants and Results

Constant	Variable Name	Value	Units
C_R	Fin Root Chord Length	8	in.
C_T	Fin Tip Chord Length	8	in.
X_B	Nose to Root Chord LE length	83.25	in.
X_R	Tail to Root Chord LE length	2.5	in.
X_{CG}	Center of Gravity (RocketPy)	57.24	in.
Equation	**Result**		**Units**
$(C_N)_f$	7.2134		NA
X_f	86.5		in.
X_{CP}	70.11		in.
SM	2.09		Calibers

Based on this verification, the center of pressure is located at 70.11 inches from the tip of the Nose Cone. This center of pressure has yielded a stability of 2.09 calibers when used in conjunction with the estimated center of gravity. The calculated center of pressure yields a percent difference of 3.35% from RocketPy and the calculated stability margin yields a percent difference of 4.4%. This satisfies NASA Requirement 2.14 and reinforces simulation confidence.

Further verification of center of gravity is performed during dry run and on launch day. During both dry run and launch day procedures, the vehicle is balanced on a rope to determine the CG point. Stability is then calculated using Equation 14 above to ensure it is greater than 2.0.

3.7.5 Ballast Placement

This configuration of the vehicle has 0.46 lbs of ballast in the tip of the Nose Cone. This ballast maintains a pad stability margin of 2.0 calibers, satisfying NASA vehicle requirements.

3.7.6 Kinetic Energy at Landing

Due to large discrepancies in the expected descent velocity and the actual descent velocity during the team's first failed Vehicle Demonstration Flight, the method in which the descent velocity is calculated has been updated to account for the drag produced by the body of the launch vehicle during descent. The new equation used to calculate descent velocity is

$$v_D = \sqrt{\frac{2mg}{\rho(A_p C_{d_p} + A_R C_{d_R})}} \tag{15}$$

where v_D is the descent velocity, m is the mass of the vehicle, ρ is air density, A_p is the canopy area of the parachute, C_{d_p} is the drag coefficient of the parachute, A_R is the affective area of the launch vehicle, and C_{d_R} is the drag coefficient of the launch vehicle.

Since the launch vehicle tumbles as it falls, the coefficient of drag and the effective area experiencing bluff body drag will vary during descent. To account for this, the team is using an effective body drag factor which was experimentally determined using the average product of A_p and C_{d_p} during the first Vehicle Demonstration Flight attempt. This factor was determined to be 1.17 ft^2.

The drogue parachute selected for the Launch Vehicle is the Fruity Chutes 15" Classic Elliptical Parachute. This parachute has a canopy area of 2.097 ft^2 and a coefficient of drag of 0.8427, resulting in a descent velocity of 100.8 fps under drogue. The main parachute selected for the Launch Vehicle is the Fruity Chutes Iris Ultra 96" Compact Parachute. This parachute has a canopy area of 86.701 ft^2 and a coefficient of drag of 1.236, resulting in a descent velocity of 16.6 fps.

Using the descent velocity, the maximum kinetic energy at landing can be calculated with the equation

$$K = \frac{1}{2} m {v_D}^2 \tag{16}$$

where K is the maximum kinetic energy.

Using a drogue descent velocity of 100.8 fps and a main descent velocity of 16.6 fps, Table 3.13 shows the kinetic energy for each of the independent sections of the Launch Vehicle.

Table 3.13: Kinetic Energy Calculations

Section	Mass (lbm)	Drogue Descent Velocity (fps)	Drogue Kinetic Energy (ft-lbf)	Descent Velocity (fps)	Kinetic Energy (ft-lbf)
Nose Cone	7.9	100.8	3381	16.6	33.8
AVAB + Main Bay	13.5			16.6	57.8
Fin Can + Drogue Bay	14.1	100.8	2228	16.6	60.4

Since all sections of the Launch Vehicle are tethered together during descent, they all fall at the same velocity, giving the Fin Can the highest kinetic energy at landing, 60.4 ft-lbf, satisfying the bonus points as per NASA Requirement 3.3.

RocketPy was used to cross verify these calculations by configuring the Launch Vehicle with the parachutes the team is using. The velocity at impact was found to be 16.9 fps, bringing the kinetic energy at landing to 63.1 ft-lbf - a 4.41% difference from our hand-calculated kinetic energy at landing.

3.7.7 Descent Time

With descent velocity for the drogue and main parachutes, the total descent time was calculated using the equation

$$t_d = \frac{r_a - r_m}{v_d} + \frac{r_m}{v_m} \tag{17}$$

where t_d is the descent time, r_a is the apogee, r_m is the main parachute deployment altitude, v_d is the drogue descent velocity, and v_m is the main descent velocity.

Assuming a nominal drogue deployment at an apogee of 4600 ft, and a nominal main deployment at 550 ft, the total descent time was calculated to be 73.3 sec, satisfying the bonus points for NASA Requirement 3.12.

From the RocketPy simulation, the time of apogee was found to be 16.9 sec, with a landing time of 81.1 sec, bringing the total descent time to 64.2 sec - a 12.42% difference from our hand-calculated descent time. This considerably faster descent time is not surprising because RocketPy does not consider any drag effects caused by the body of the launch vehicle during descent.

3.7.8 Drift Distance

With the total descent time and the wind speed, the total drift distance of the Launch Vehicle can be calculated with the equation

$$r_{drift} = t_d v_w \tag{18}$$

where r_{drift} is the total drift distance and v_w is the wind speed.

Table 3.14 shows how the drift distance of the Launch Vehicle from the launch pads will vary with wind speeds up to a maximum of 20 mph.

Table 3.14: Wind Drift Distance

Wind Speed (mph)	Drift Distance (ft)
0	0
5	537
10	1075
15	1612
20	2150

These calculations assume that the Launch Vehicle will constantly drift with the wind and will reach apogee directly above the launch pad with no initial horizontal velocity. In actuality, the Launch Vehicle will start with an initial velocity into the wind from the flight. Since RocketPy calculates the actual flight path of Launch Vehicle before the descent starts, these drift distance calculations will be more accurate to what we would expect during a normal launch.

Figure 3.97 below shows the drift of the Launch Vehicle over time under 0 mph winds starting at takeoff up until apogee (note that the units are in meters).

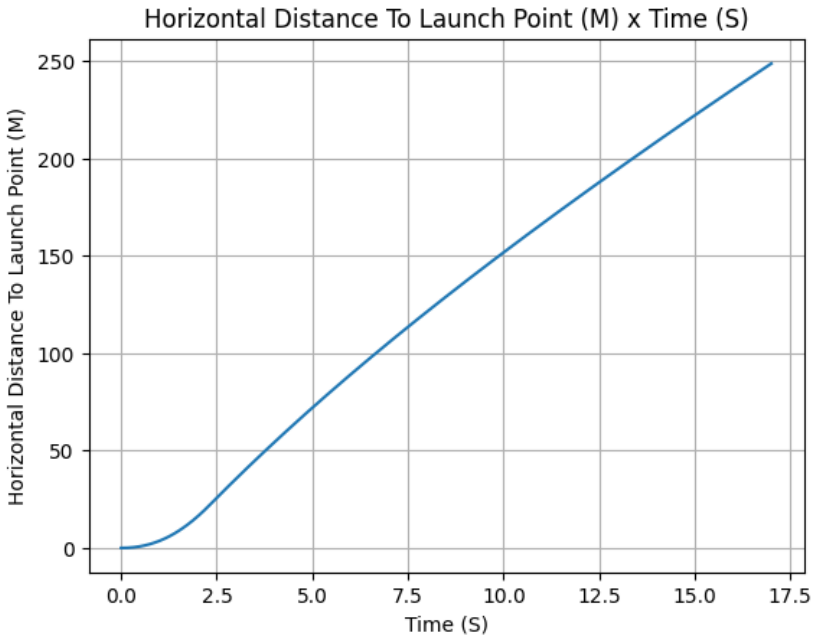

Figure 3.97: RocketPy Drift Distance During Flight (0 mph Winds)

As shown, the Launch Vehicle drifts 816 feet during the flight up to apogee. The vehicle then carries that initial velocity into it's descent. This initial velocity, is the reason for the discrepancies in the drift distance between the team's hand calculations and RocketPy. All RocketPy calculated drift distances are shown in Table 3.15 below.

Table 3.15: RocketPy Wind Drift Distance

Wind Speed (mph)	Drift Distance (ft)
0	512
5	544
10	638
15	794
20	998

Looking at the more realistic RocketPy calculations and the hand calculations with no initial velocity, both of these methods verify that the Launch Vehicle will not drift more than 2500 ft. during its descent, satisfying NASA Requirement 3.11.

4 Payload Criteria

4.1 Payload Mission Statement and Success Criteria

4.1.1 Mission Statement

The primary objective of the Wireless APRS Relay for High-altitude Environmental and Atmospheric Data (WARHEAD) payload is to safely retain four STEMnauts while recording data throughout the launch. Upon landing, the WARHEAD will prepare and send a transmission that will relay the necessary data points to a NASA receiver. This transmission will take place on the 2 meter band using APRS and the transmission will stop autonomously within 5 minutes of the launch vehicle landing, with the ability for the team to initialize and terminate a transmission remotely.

4.1.2 Success Criteria

Table 4.1: Payload Success Criteria

Success Level	Payload Aspect	Safety Aspect
Complete Success	The STEMCRaFT accurately collects all 9 pieces of data AND successfully transmits the data to the NASA receiver.	No one is harmed or injured during payload operations, with all risks effectively mitigated.
Partial Success	The STEMCRaFT accurately collects less than 9 pieces of the data but still transmits at least 3 pieces of data to the NASA receiver.	No one is harmed during payload operations, but there are moments that pose potential risks to individuals.
Partial Failure	The STEMCRaFT transmits between 1 and 3 pieces of accurate data to the NASA receiver.	Some risks are not fully mitigated, leading to minor injuries to individuals during payload operations.
Total Failure	The STEMCRaFT does not transmit any data to the NASA receiver OR the STEMCRaFT transmission does not shut off.	Unmitigated risks result in major injuries to individuals during payload operations.

4.2 Payload Design Changes Since CDR

4.2.1 Structural Changes

The STEMCRaFT length was increased by 1.5 inches to accommodate replacement of a 2S 2200mAh LiPo battery with a 4S 2200mAh LiPo battery and provide additional space for wiring. This modification does not introduce any integration issues with the Nose Cone and provides a significantly prolonged battery life to allow for more flexibility on launch day timelines.

An integrated camera system, connected to the WARHEAD flight computer, was added. The camera is mounted within an aerodynamic housing secured to the Nose Cone using two M3 screws, as shown in Fig. 3.2, Section 3. To prevent interference with other systems, the camera operates independently of the WARHEAD's flight software. Additionally, a slot for the camera cable was incorporated into the STEMCRaFT capsule shell to accommodate this change.

4.2.2 Electronics Changes

One of the changes is with the method of toggling push-to-transmit (PTT) on the transmission system. Prior to this change, the Raspberry Pi was directly controlling the PTT via a GPIO pin. During testing, this setup resulted in a rapid clicking during transmission that interfered with the format of the APRS message. To circumvent this issue, an IRLB8721PBF MOSFET was implemented between the Raspberry Pi, and the SA858 transmitter. The new set-up uses the N-MOSFET to tie the PTT directly to common ground when 3.3V is supplied to the gate. Additionally, multiple LED indicators were added to the setup to prevent back electromotive force (EMF) and allow for a visual indication of a transmission.

The WARHEAD's CHARGE (Current Handling and Automatic Regulation for Grid Energy) system now incorporates a 4S LiPo battery, replacing the previous 2S LiPo. During early testing, the WARHEAD's power draw exceeded pre-manufacturing analytical predictions, causing it to narrowly meet the battery life requirements outlined by NASA Requirement 2.6 and TDR.PF9. With the larger CPU battery, the WARHEAD can now remain active for 5+ hours, passing team defined verification testing and meeting NASA requirements.

A 10,000 µF, 16V capacitor was added between the new 4S 2200mAh LiPo battery and the LM2596 buck converter that powers the CPU. This capacitor smooths out potential voltage fluctuations and acts as brownout protection from aerodynamic forces during flight.

Several electronic power supply connections were modified. Most notably, the XBee transceiver is now powered directly from the primary CPU battery instead of the SWITCH (Scheduled Wireless Information Transfer and Compilation Hub) transmission system power line. Conversely, the active ventilation fan was rewired to use the SWITCH's power line instead of the CPU's power line. This redistribution balances power draw across the batteries and extends the WARHEAD's operational lifespan.

Additionally, the SA858 transceiver is no longer regulated down to 5V and is instead receiving up to a full 8.4V from it's 2s LiPo. This change significantly strengthens the APRS transmission and improves the reliability of receiving signals from SWITCH.

4.3 Payload Design Overview

4.3.1 Payload Mission Design

Flight CONOPS

The overall mission design remains relatively unchanged from CDR. Included below is a brief review of the mission CONOPS as presented in the team's CDR documentation.

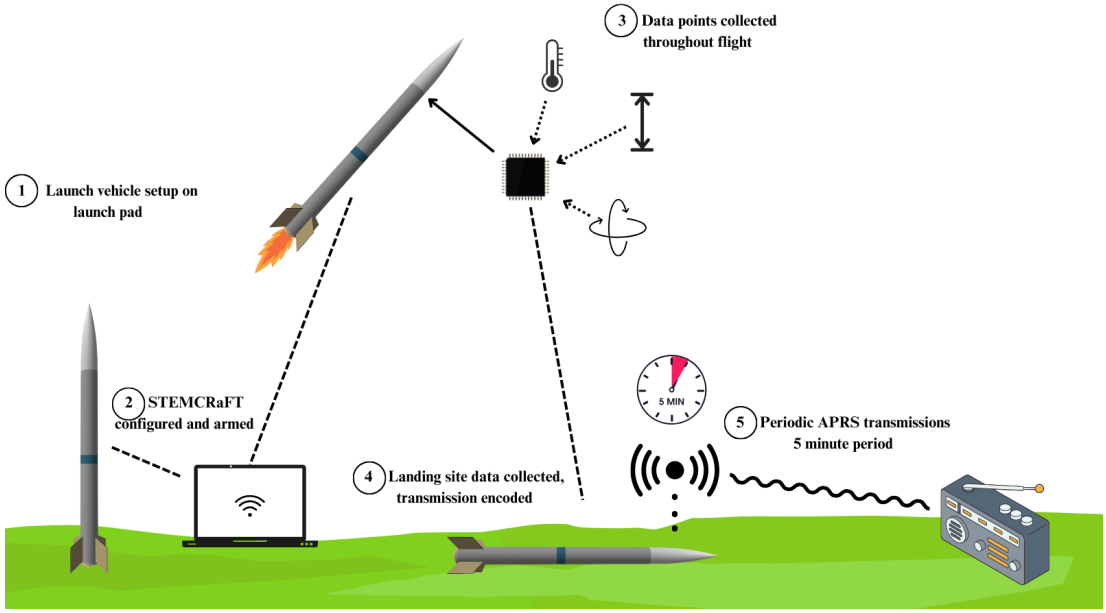

Figure 4.1: STEMCRaFT Mission CONOPS

Figure 4.1 provides a high-level overview of the mission objectives and operational flow of the WARHEAD. This diagram outlines the primary functionality of the WARHEAD, detailing how it fulfills the objectives as defined by the NASA SL handbook. A detailed breakdown of the onboard electronics, subsystems, and ground station interactions is provided in the following sections.

The mission design uses distinct operational phases in order to ensure proper setup and performance during the launch vehicles flight. These phases include the initialization and setup phase, performed on the launch pad; the operational flight phase, where the WARHEAD is responsible for collecting and processing data; the transmission phase, where recorded data is relayed via APRS; and the shutdown phase, where all remaining data is logged and the system enters a non-functional standby mode until recovered by the team.

The initialization and setup phase occurs on the launch pad and consists of arming and verifying the WARHEAD's onboard systems. Once the launch vehicle is prepared on the launch pad, the pull-pin is removed, initializing the WARHEAD. The FUSE data collection subsystem and Raspberry Pi CPU will initialize, and FUSE will begin recording and relaying data to the primary CPU. During this phase, ground station communication will be tested(without the use of ANY 2M transmission), data collection capabilities will be confirmed, and power levels will be checked. Once the initialization sequence is complete, the WARHEAD enters a standby state, awaiting launch detection.

Once initialized, the WARHEAD will begin to monitor altitude and velocity data via the FUSE subsystem, in order to determine takeoff. The onboard systems finite state machine (FSM) will process the sensor's data in real time to track flight progression and monitor for state changes. The system monitors a variety of data points to dictate the functionality of the state machine. This data is further defined in 4.3.3. The aft-facing camera, introduced since CDR, logs footage of the flight and Air Brakes deployment throughout the flight, allowing for further post-recovery analysis.

Upon landing, the transmission phase will begin, during which the WARHEAD will compile mission data into an APRS packet containing the desired data points and transmit them via the SWITCH subsystem. The transmission will occur for no longer than 5 minutes post-landing, as outlined in TDR PF.9, to ensure compliance with NASA requirements. The updated power system, which now utilizes a 4S LiPo battery for the primary CPU, allows for an increase in the lifespan of the primary electronics, protecting from any potential delays at the launch pad.

Finally, the shutdown phase will be entered after the WARHEAD's transmission period has elapsed. During this phase, the WARHEAD will continue to listen for remote override signals should they be required in the case of extended transmission or early transmission. In this recovery state, the WARHEAD will remain idle until it is recovered or until it receives an override command via the TORCH ground station.

This updated mission profile reflects the final design changes made since the CDR submission. These changes were implemented to ensure reliable operation during the competition, increased battery capacity, and more reliable transmission/control of the overall mission.

System CONOPS

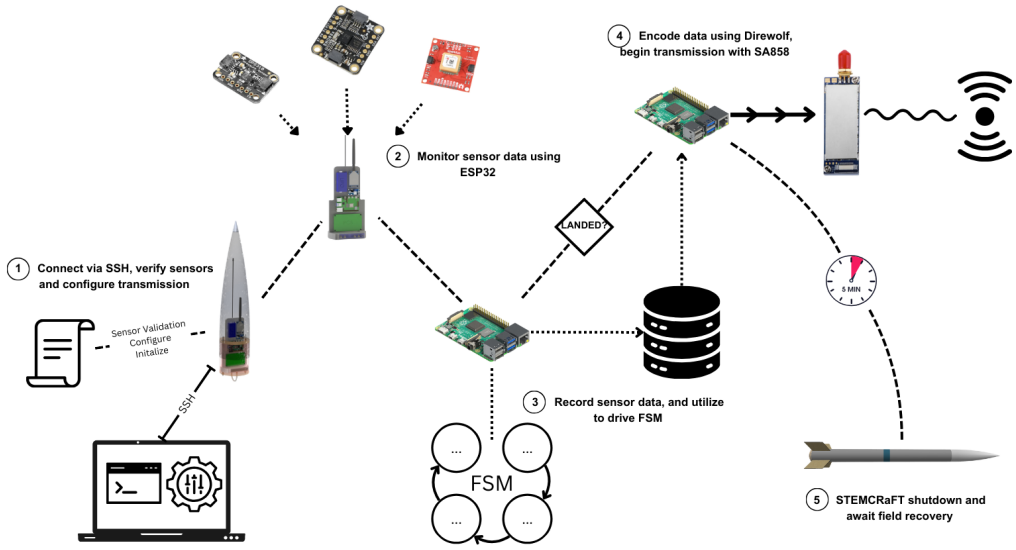

Figure 4.2: WARHEAD Onboard Systems CONOPS

The WARHEAD's onboard electronics are primarily controlled through a finite state machine (FSM) identical to that described at CDR milestone. This finite state machine dictates system behavior throughout the flight of the launch vehicle and on the launch pad. The primary flight computers, the Raspberry Pi CPU and ESP32 (FUSE subsystem controller), manage data collection, state progression, and communications.

During the standby phase, the WARHEAD is powered on and initialized by removing the pull-pin at the launch pad. Upon initialization, a member of the team will be given the ability to make various configurations via a remote connection to the Raspberry Pi. Using this remote connection, the team will configure the transmission call sign, and ensure that the subsystems are connected properly. The FUSE subsystem begins recording environmental data via the pressure sensor, IMU, and GPS, which is relayed over a serial USB connection for logging and data processing. Throughout this phase, the XBee transceiver begins actively listening for override signals from TORCH, ensuring remote overrides may be triggered at any phase of the launch.

As the launch begins, the FSM will progress through the burn, coast, and drift phases. The ESP32 continuously polls the DPS310 barometer and the BNO085 IMU, collecting real-time altitude and acceleration data for use in data processing within the WARHEAD Raspberry Pi. These values are used to determine the state progression and log data that may be required for data points used in the final transmission. Sensor data is stored in a log file within the Raspberry Pi, and the ESP32 uses minimal processing to ensure efficient data collection during the flight.

During descent, the FSM monitors altitude and velocity changes to confirm landing. Upon detecting a significant drop in velocity and/or a stable ground-level altitude reading, the WARHEAD will transition into the landed/transmission phase after a brief delay. At this point, the FUSE data collection subsystem will shutdown, and the SWITCH subsystem will compile recorded flight data into an APRS packet, via the Direwolf software, and transmit via the SA858 transceiver. Transmission will continue for no longer than five minutes after landing, in accordance with competition regulations.

Once the transmission period has concluded, the WARHEAD enters the shutdown phase. The system ceases active data collection and transmission, reducing power consumption while maintaining XBee monitoring for potential override commands. If no further signals are received, the WARHEAD remains idle until recovered by the team.

APRS Transmission Format

Below is an example of an APRS transmission from WARHEAD, using the format that is intended to be used during the competition launch in May:

```
"T=59.69°F,A=2015.70ft,BAT=CPU:0.00%|TX:0.00%,O=(R=-5.56,P=-55.20,Y=69.96),TL=04:18:23,MV=2752.39ft/s,LV=0.00ft/s,CS=84.5%"
```

Figure 4.3: APRS packet as received using Direwolf.

Shown in the Figure 4.3 above is the Direwolf output from an APRS broadcast received by the ground station. Note that the GPS coordinates are included in the location field of the APRS transmission, rather than the message field to conform to APRS standards. This allows the message field to be used exclusively for the remaining required data points, ensuring that all critical information fits within the allocated message space.

The data points contained within the APRS packet are marked as follows:

- T - Temperature of landing site(F)
- A - Apogee reached(ft)
- BAT - Battery check/power status(%)
- O - Orientation of onboard STEMnauts(Roll, Pitch, Yaw)
- TL - Time of landing(HH:MM:SS)
- MV - Maximum velocity(ft/s)
- LV - Landing velocity(ft/s)
- CS - Crew survivability(%)

Note that since the team utilizes a team derived requirement of not hard coding a call sign into the WARHEAD software, the call sign used during launches and testing may vary. All transmission utilized by the team will also include an additional identifying factor, such as an ”NCSU” or ”NCSUHRPC” flag at the beginning of the message. This will serve to assist in identifying the teams transmission, and differentiating from other potential ARPS broadcast.

This message format will remain unchanged between the submission of this document and the competition launch in Huntsville on May 3rd, unless modifications become necessary due to issues that render the current format nonviable.

4.3.2 Payload Structural Design

Structural Components

The STEMCRaFT consists of four primary structural components: the sled, top bulkhead, bottom bulkhead, and capsule shell. Each component is 3D-printed using PETG filament with a minimum infill of 25% to ensure structural integrity under flight stresses.

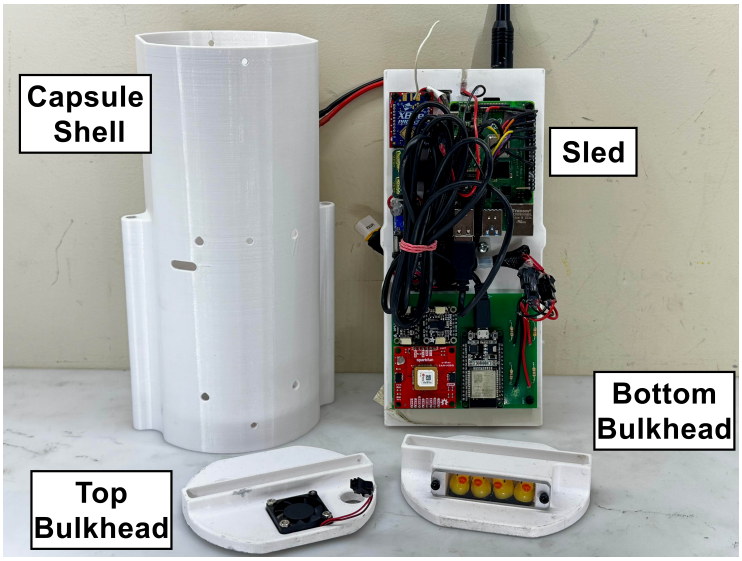

Figure 4.4: STEMCRaFT structural components.

The sled serves as the backbone of the STEMCRaFT, securing the electronics and providing structural support. Electronic components and batteries are mounted on both sides of the sled using the retention methods described in Section 4.5.1. A slot in the sled allows easy wire routing between sides. Additionally, hex nuts are embedded in the sled's sides, allowing the capsule shell to be secured externally with screws.

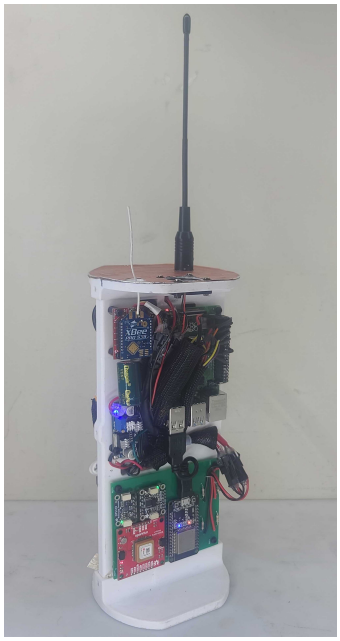

(a) STEMCRaFT without the capsule shell.



(b) STEMCRaFT with the capsule shell on.

Figure 4.5: Comparison of STEMCRaFT with and without the capsule shell.

At the forward end, the top bulkhead houses a ventilation fan (Figure 4.6) and includes openings for the radio transmission and XBee antennas. Its forward face is lined with foil to create a ground plane for the radio transmission antenna. At the aft end, the bottom bulkhead features a compartment designed to house four STEMnauts. Both bulkheads slot onto the sled and include holes for mounting screws to secure them in place.

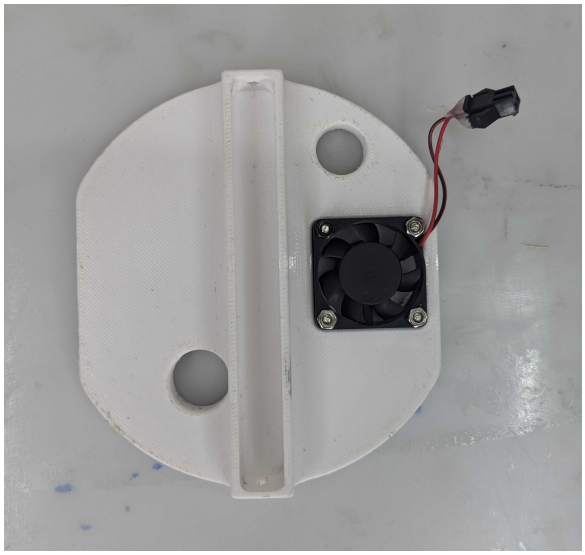

Figure 4.6: Ventilation fan on top STEMCRaFT bulkhead.

The capsule shell serves as the outer housing for the STEMCRaFT, protecting the electronics and facilitating integration with the Nose Cone. Its shape is designed to pass easily through the permanent ring bulkhead in the Nose Cone, while maximizing the usable volume. The shell includes several holes for airflow ventilation, mounting to the sled and bulkheads, securing the pull pin, and routing the camera cable. The total mass of the assembled STEMCRaFT is 2.55 lbs, as outlined in Section 4.5.3.

STEMCRaFT Assembly

The STEMCRaFT is designed for easy assembly and disassembly. First, the sled is slotted into the bottom bulkhead, which is stable on its own. Next, the capsule shell is slid over the sled and bottom bulkhead. Finally, the top bulkhead is slotted onto the top of the sled inside the capsule shell. The entire assembly is secured with six #6-32 low-profile screws that thread into the hex nuts embedded in the sled's sides. This modular design allows the capsule shell to slide on from either the forward or aft end and permits independent removal of the top or bottom bulkhead.

Payload Retention and Integration

The integration of the STEMCRaFT into the Nose Cone relies on the use of threaded rods and bulkheads to prevent rotation and axial movement. The STEMCRaFT slides onto two threaded rods and sits between the permanent ring bulkhead and the removable bulkheads, as detailed in Section 3.3.2. The bulkhead is secured to the Nose Cone using a washer and 1/4" hex nut on each threaded rod.



(a) STEMCRaFT resting inside the Nose Cone.



(b) Removable bulkhead installed on Nose Cone.

Figure 4.7: STEMCRaFT retention system.

The bottom of the capsule bulkhead features an indentation, allowing it to sit flush on the Nose Cone's removable bulkhead. The transmission antenna on top of the STEMCRaFT is positioned to fit within the Nose Cone without interfering with the wall or the removable ballast at the tip. As shown in Figure 4.8b, there are 5 inches of clearance between the ballast and antenna with the planned 0.46 lb of ballast. Fit checks have confirmed proper tolerances and clearances, validating the design's compatibility with the launch vehicle.



(a) Nose Cone removable bulkhead and STEMCRaFT.

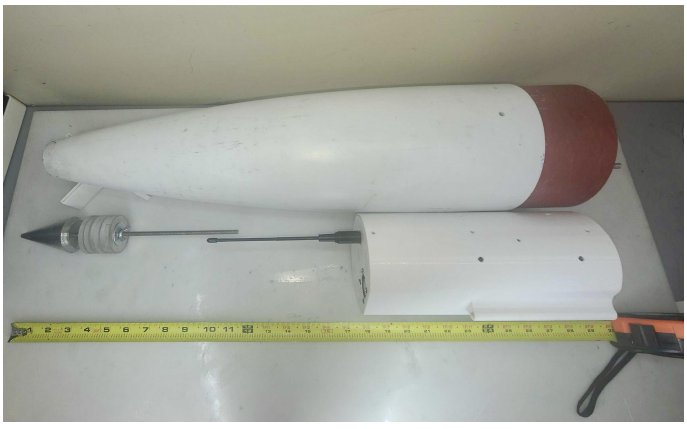

(b) Clearance between STEMCRaFT and Nose Cone ballast.

Figure 4.8: STEMCRaFT integration into the Nose Cone.

The camera, which is integrated directly into the Nose Cone, connects to the designated ribbon cable from the flight computer. This connection is made during the insertion of the STEMCRaFT into the Nose Cone. Additionally, proper alignment is required during integration to ensure that the pull-pin holes on both the STEMCRaFT and the Nose Cone are correctly lined up.

4.3.3 Payload Electronics Design

Contained within the STEMCRaFT is the Wireless APRS Relay for High-altitude Environmental and Atmospheric Data (WARHEAD) system. This system serves as the primary electronic unit of the payload and is responsible for controlling the flight software, collecting atmospheric and landing data, and managing the transmission system. To accomplish these tasks, WARHEAD is composed of multiple subsystems, each dedicated to a specific core function. These subsystems include:

- FUSE – Data Collection Subsystem
- SWITCH – Transmission Subsystem
- CHARGE – Power Supply Subsystem
- TORCH – Ground Station

Each subsystem plays a crucial role in ensuring the successful completion of this year's payload challenge. The following sections provide a conceptual breakdown of the design and functionality of each subsystem. Detailed information on the manufactured subsystems can be found in 4.5.

WARHEAD

The Wireless APRS Relay for High-altitude Environmental and Atmospheric Data (WARHEAD) is made up of various underlying systems and utilizes each subsystem's capabilities to accomplish the mission profile outlined in 4.3.1. Majority of this design remains unchanged from the STEMCRaFT payload design presented previously in the CDR document.

Included below is a functional block diagram showing the high-level interactions between the various components and systems.

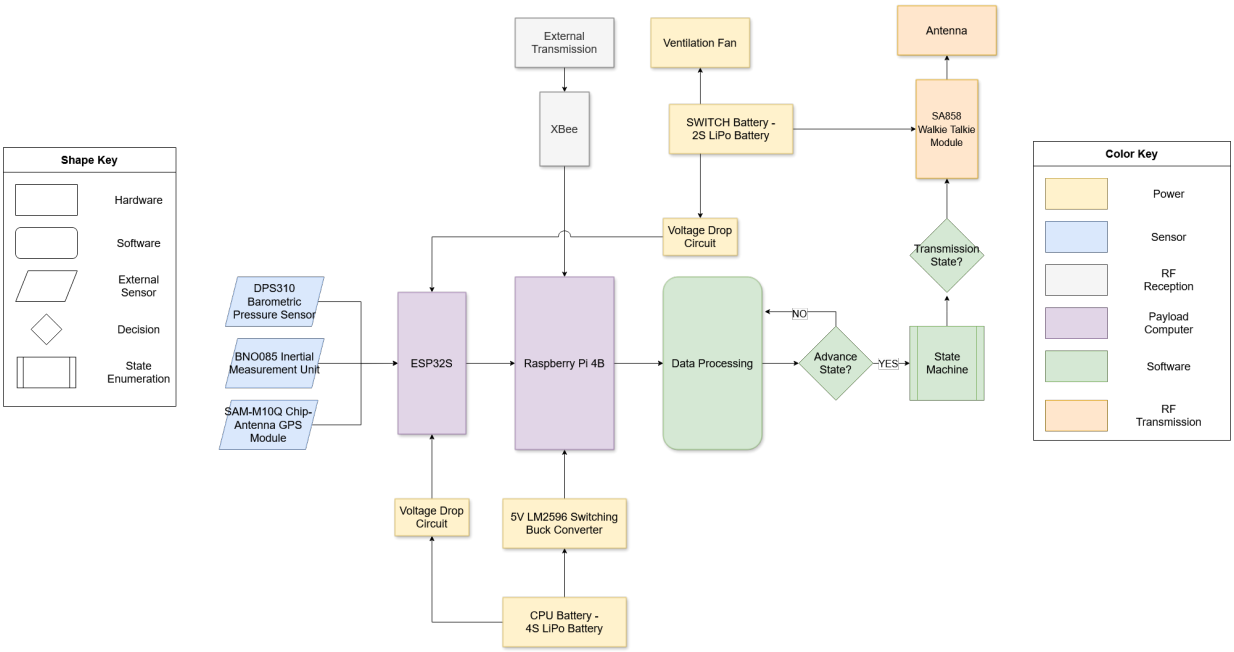

Figure 4.9: WARHEAD functional block diagram.

As indicated in Figure 4.9, the WARHEAD utilizes two central computers to accomplish the processing required for the mission objective. The first of these computers is the ESP32, which is responsible for managing the FUSE Data Collection Subsystem. This subsystem reads data from the various onboard sensors and compiles it into a binary packet, which is then relayed to the primary CPU, the Raspberry Pi, for further use. Using a separate computer for the FUSE subsystem, the flow of data is streamlined. This allows for more efficient sensor data acquisition, as the ESP32 is not performing the same level of processing as the primary CPU, ensuring that the processing power has minimal impact on sensor performance.

Once the primary CPU receives the serial data from the FUSE subsystem, it begins processing this data to drive the finite state machine. This method of data processing allows the CPU to easily determine what functionality must be performed to meet the WARHEAD's mission objective. Once the serial data is decoded, the current sensor data is used to dictate what state the WARHEAD is in and whether it should progress to the next state and change functionality. This state machine is responsible for the autonomous operation of the WARHEAD, processing override commands, and signaling the SWITCH subsystem to begin transmission upon landing.

Table 4.2: State Machine Parameters

State	Standby	Motor Burn	Coast	Free Fall	Landed/-Transmission	Recovery	Shutdown
Requirements	Altitude, Velocity	Time Delay	Altitude	Altitude, Velocity	Time Delay, Transmission Complete	-	-

As indicated in Table 4.2, the state machine primarily operates based on position and velocity data obtained from the FUSE subsystem, along with static delay periods. This allows the WARHEAD to accurately detect the different phases of the launch while ensuring that certain stages last a minimum duration and do not advance too early. These time delays are necessary to ensure that motor burn is excluded from crew survivability calculations and that the transmission period does not extend beyond five minutes after landing.

Lastly, crew survivability is based upon the following parameters.

- Acceleration, G-forces experienced during coast/free-fall
- G-forces experienced at recovery events
- G-forces experienced upon landing
- Temperature of STEMCRaFT

DPS310 flags pressure/temperature stress, BNO085 tracks acceleration/spin, and landing speed applies a final multiplier . Survival starts at 100% and decreases with each sensor's extreme reading.

Note that the crew survivability is not impacted by forces experienced prior to the coast state. This decision was based upon the desire to use survivability metrics that could apply to human passengers. Due to the nature of high-powered rocketry, it's unlikely most humans would be capable of withstanding the 12G's of acceleration that are likely to be experienced off the rail, and during the motor burn phase.

After the WARHEAD has determined that the launch vehicle has landed, and a sufficient delay period has elapsed, or the GPS has received a fix, the WARHEAD will utilize the SWITCH subsystem. This subsystem will compile the processed data from the FUSE subsystem, and encode it in an APRS message of the format outlined in Section 4.3.1. The SWITCH will then begin broadcasting this APRS signal periodically over a short period, until the transmission window has elapsed, or the WARHEAD received a manual override to shut down. At this point the mission objective will have been completed, and the WARHEAD will remain in a recovery state until the team is able to recover the launch vehicle.

FUSE Data Collection Subsystem

The FUSE data collection subsystem is responsible for ensuring that the WARHEAD has access to a steady stream of flight data. FUSE manages all external data obtained by the WARHEAD, with the exception of the remote override system, which operates independently from FUSE and interfaces directly with the WARHEAD's CPU.

Included below are schematics and diagrams representative of the FUSE subsystem.

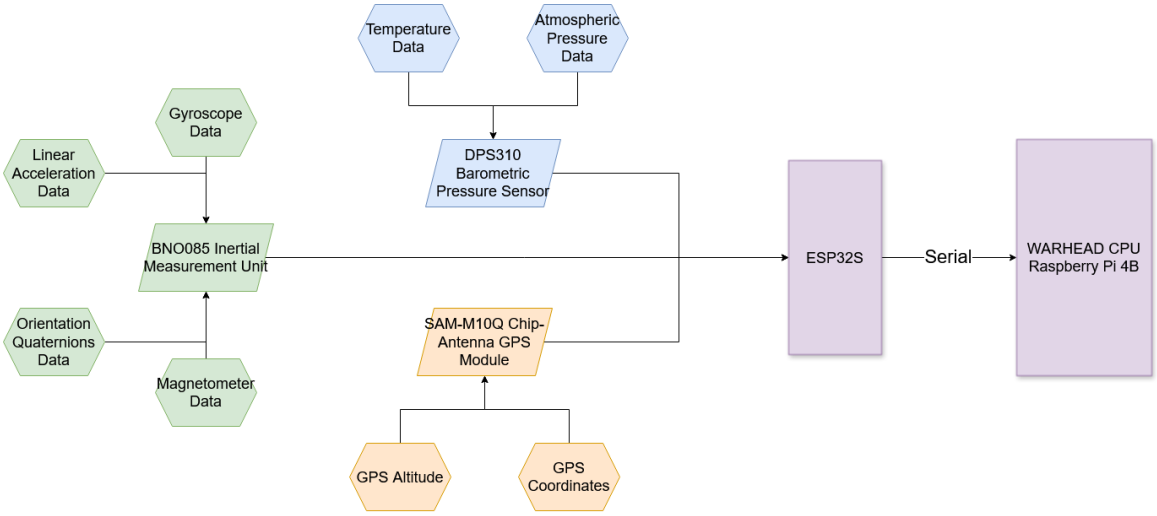

Figure 4.10: FUSE block diagram.

Figure 4.10 shows the general flow of information from environmental data to its compilation into a serial signal, which is then delivered to the WARHEAD CPU. As indicated in the block diagram, FUSE is capable of collecting the following data points.

- Barometric Pressure
- Environmental Temperature
- Approximate GPS Coordinates
- Approximate GPS Altitude
- Linear Acceleration
- WARHEAD Orientation
- Magnetometer Data
- Gyroscope Data
- 4S CPU LiPo Battery Voltage Level
- 2S SWITCH LiPo Battery Voltage Level

This data is all logged and utilized in various ways by the WARHEAD's Raspberry Pi CPU. Note that the fan installed on the top bulkhead of the STEMCRaFT operates continuously as a ventilation fan, assisting in providing the most accurate data possible for the DPS310 pressure sensor.

Additionally, FUSE utilizes a dual voltage drop setup to adjust the battery voltage levels to those acceptable for the ESP32. These voltage levels are used to log and report the current battery levels of the WARHEAD. The circuit used is detailed further in Section 4.5.2.

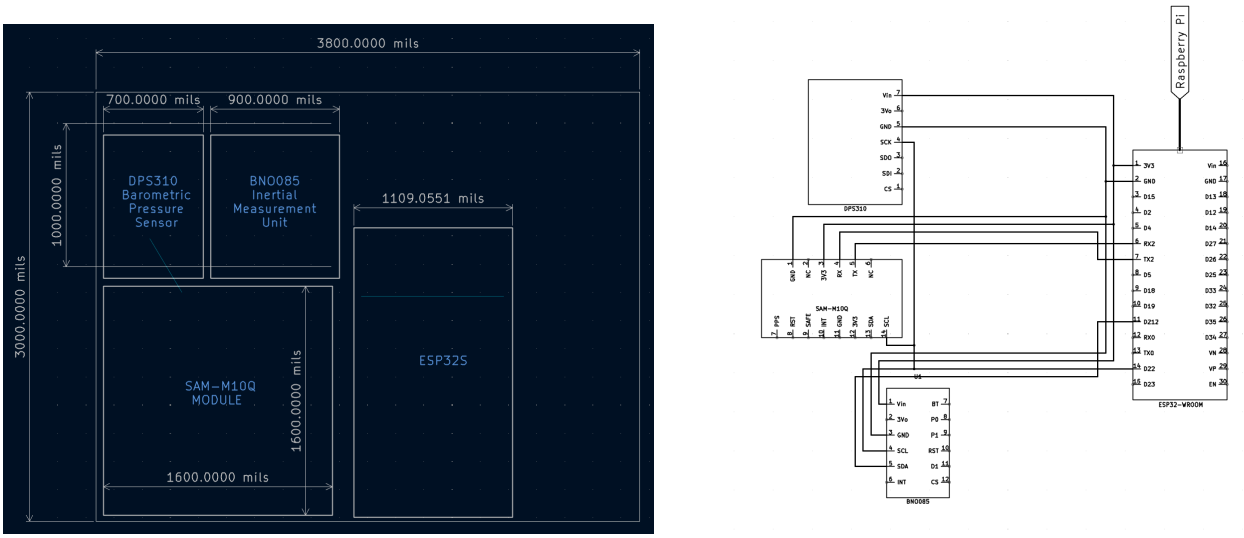

(a) FUSE dimensions.

(b) FUSE wiring schematic.

Figure 4.11: FUSE dimensions and wiring schematic.

Shown in Figure 4.11a are the CAD dimensions of the various sensors and the PCB on which the FUSE subsystem is mounted. Due to outsourced manufacturing, the finalized PCBs are nearly identical to the CAD models and are detailed further in Section 4.5.2.

Lastly, Figure 4.11b details the wired connections and communication protocols used within the FUSE subsystem. All sensors are routed to the same I2C channel and connected to the ESP32, receiving 3.3V of power from the ESP32. The wiring was designed this way to avoid unnecessary complexity and keep the setup as simple as possible.

On the right side of the wiring schematic, the two voltage inputs from the WARHEAD batteries are indicated. The circuits used to reduce these voltages from 16.8V to 3V and 8.4V to 3V are detailed in Section 4.5.2. Once the ESP32 gathers data from the sensors, the information is transmitted over a serial USB connection to the WARHEAD's Raspberry Pi.

SWITCH Transmission Subsystem

The FUSE transmission subsystem is responsible for encoding the desired data points into a packet of data formatted as an APRS message, and broadcasting the encoded message on the 144.390 MHz APRS frequency. This subsystem is detailed in the SWITCH block diagram below.

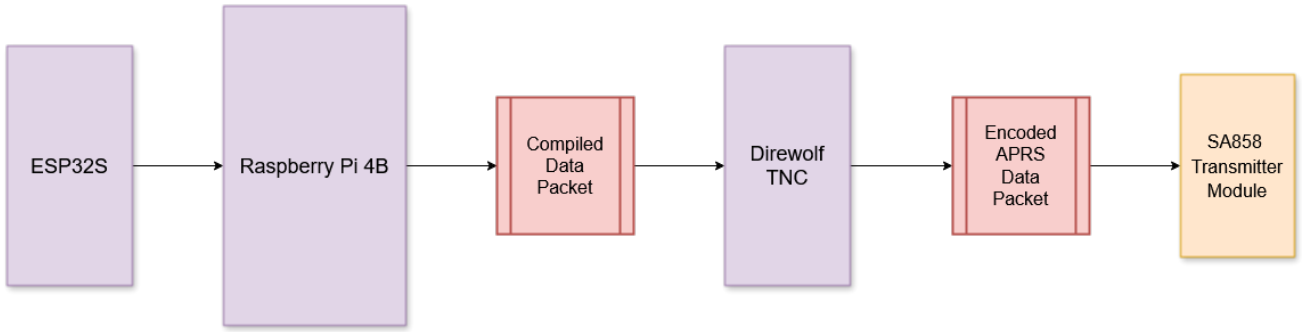

Figure 4.12: SWITCH block diagram.

As shown in Figure 4.12, the SWITCH subsystem relies on an input data packet created by the WARHEAD CPU. This data packet contains the desired data points and utilizes the Direwolf software to encode the data into the format described in Section 4.3.1. The message will contain the eight data points required for a complete transmission and will include the approximate landing coordinates of the STEMCRaFT. The GPS coordinates of the WARHEAD will be omitted from the message portion of the APRS signal, as all APRS transmissions already include a field for the transmission source's latitude and longitude. Instead, the WARHEAD GPS coordinates will be included in this APRS source location field.

Once the WARHEAD CPU compiles the required flight data into an APRS packet via Direwolf, the encoded audio signal is delivered from the CPU to the SA858 transmitter within the SWITCH subsystem. Since APRS is built upon audio frequency shift keying (AFSK), this signal is delivered as an audio signal to the SA858. This is achieved using a 3.5mm-to-3.5mm audio wire connecting the audio output of the WARHEAD CPU to the audio input of the SA858 transceiver. This setup is described in more detail in Section 4.5.2.

While this APRS signal is being transmitted, the WARHEAD CPU will briefly pull a GPIO pin high, triggering a MOSFET and causing the PTT pin on the SA858 transmitter to toggle. This allows the WARHEAD's Raspberry Pi to accurately control the SWITCH system's transmission without overloading the transmitter.

Once the SA858 transmitter receives this AFSK signal and its PTT is enabled, SWITCH will begin broadcasting an APRS transmission containing the encoded data packet. This transmission will occur multiple times, but will not extend beyond five minutes after the launch vehicle has landed. The precise number of transmissions may change before the competition launch, but the signal format, configuration, and SWITCH process will remain unchanged.

CHARGE Power Supply Subsystem

The CHARGE subsystem is responsible for providing and regulating power to the various electronics contained within the WARHEAD. CHARGE is powered by two separate Lithium Polymer (LiPo) batteries. The first of these is a 2S 2200mAh LiPo battery, which supplies power to the SA858 transmitter of the SWITCH subsystem and the ventilation fan mounted on the upper bulkhead of the STEMCRaFT. This differs slightly from the design presented in the prior CDR document and was modified to more evenly distribute the electronics' power draw. Since the SA858 transmitter and ventilation fan can operate with up to 9V of power, the voltage regulator was removed, allowing the transmission LiPo to deliver power directly to both components.

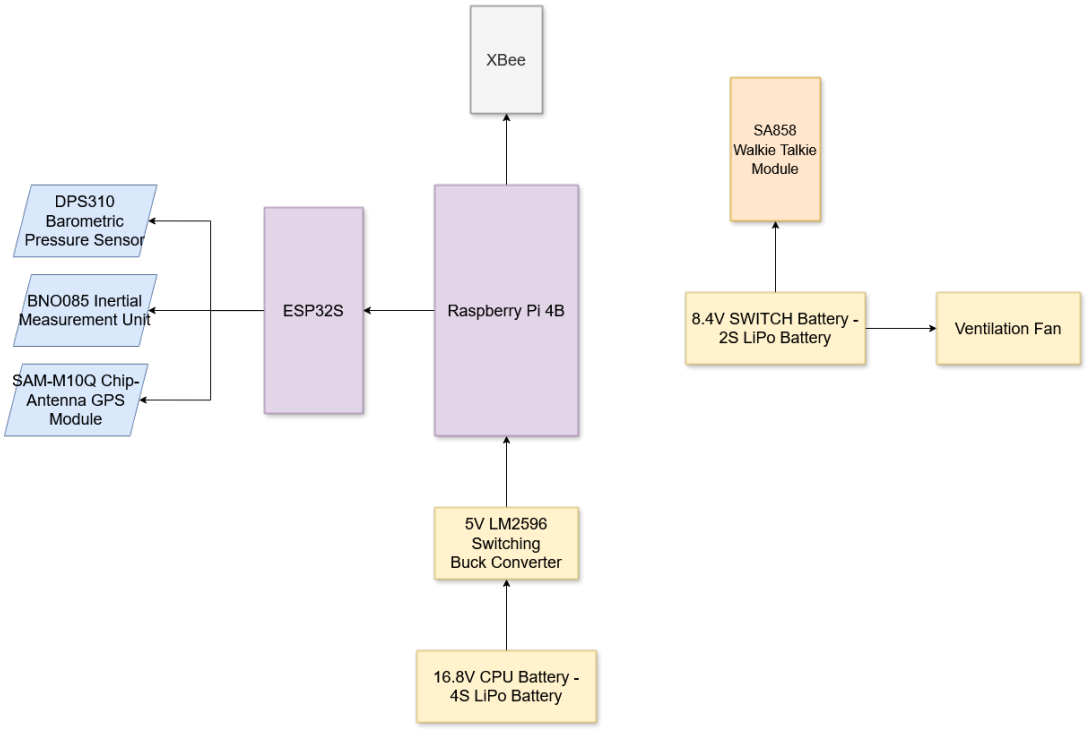

Figure 4.13: CHARGE battery diagram.

By eliminating the voltage regulator, the SWITCH system receives more power, resulting in a significantly stronger transmission, closer to 4 watts, than when regulated down to 5V. This ensures that SWITCH can generate a strong enough signal to be received by a radio receiver, regardless of drift distance. Additionally, increasing the voltage supplied to the ventilation fan enables FUSE to obtain more accurate environmental data.

Since the WARHEAD houses multiple electronics within a highly confined area in the STEMCRaFT, the ventilation fan was unable to generate sufficient airflow when limited to 5V. However, when powered by the full LiPo charge of 8.4V, the fan is far more effective at producing the necessary airflow to improve FUSE sensor performance. The inclusion of the fan has minimal impact on the transmission battery life, as the battery was previously only used upon transmission, occurring at the very end of the mission.

The remaining components are primarily powered through the 5V and 3.3V rails of the WARHEAD's Raspberry Pi CPU. This CPU is powered by a 4S 2200mAh LiPo, which is regulated down to 5V, making it compatible with the Raspberry Pi. By utilizing a 4S LiPo instead of a 2S LiPo, the WARHEAD's battery capacity is significantly increased, as the 4S LiPo provides twice the voltage of a 2S LiPo.

As mentioned previously, the Raspberry Pi is responsible for the majority of power delivery to other subsystems and components. The ESP32 is powered via USB, where it can draw up to 250 mA, far below the 100 mA maximum draw of an ESP32. Once powered, the ESP32 supplies 3.3V to all onboard sensors, resulting in a fully powered FUSE system.

The XBee module, responsible for receiving remote override signals, operates on a 3.3V logic level. However, it is mounted on a SparkFun XBee Explorer board, which accepts a 5V logic level and regulates it down to 3.3V internally. As such, the XBee Explorer board is connected directly to the 5V rail of the Raspberry Pi CPU.

Both LiPo batteries are mounted at the rear end of the STEMCRaFT, as shown in Section 4.5.1. These batteries are connected to a dual pull-pin module, allowing both systems to be controlled using a single pull pin accessible from outside the STEMCRaFT and Nose Cone.

TORCH Ground Station

The last electrical subsystem utilized is the TORCH Ground Station. TORCH consists of the ground station's XBee transceiver, paired with the XBee contained within the WARHEAD, and a 2M BAOFENG Radio Receiver used to monitor for any APRS transmissions. The purpose of TORCH is to illuminate the WARHEAD's current status, both during and after its flight. By monitoring for an APRS transmission, the team can determine whether a remote override must be performed and if the APRS data packet is being received properly.

Shown below is a diagram of the various electronics utilized by the ground station and their connections.

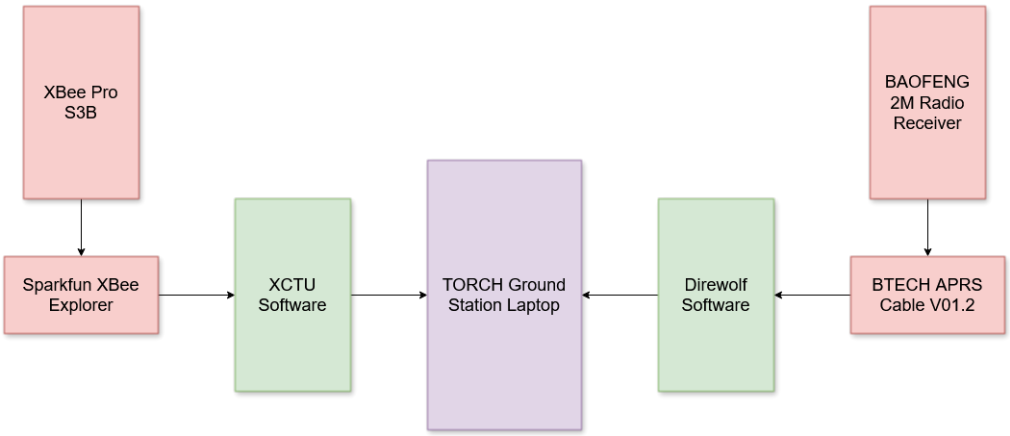

Figure 4.14: TORCH ground station.

TORCH uses a 2M handheld radio, tuned to the 144.390 MHz APRS frequency, connected to a Windows/Linux laptop via the BTECH APRS V02.1 cable. By connecting the handheld receiver to a laptop, the team can use Direwolf software to decode any APRS transmissions and log them for future reference. Having proper logs on the receiving end of the RF signal allows the team to more accurately analyze data during post-launch review.

Additionally, the ground station features an XBee with an inverted source/destination address. This configuration allows the ground station and WARHEAD to establish a unique connection in the ~900MHz range with minimal risk of interference. This XBee serves as the team's primary means of delivering remote override signals if required.

4.3.4 On-Board Camera

Although the camera is connected to the WARHEAD's flight computer, it remains functionally isolated from the rest of its electronics and hardware. Minimal hardware connections are required, and the use of the flight computer for recording and logging video results in negligible performance loss. The Arducam, connected to the Raspberry Pi 4's camera port via a 20624 ribbon cable and extension boards, records 1080p video at a resolution of 1920×1080 for the duration of the flight, splitting files into 5-minute segments using the `rpicam-vid` command. Operating as an independent subsystem, the camera runs in a dedicated tmux session on the Raspberry Pi 4, ensuring continuous recording throughout the mission without interference from other processes. This setup utilizes `tmux`'s session management to maintain uninterrupted video capture. Storage usage from the camera log files remains under 15%, as verified in Section 8.2.12.



(a) Picture of the extension boards.

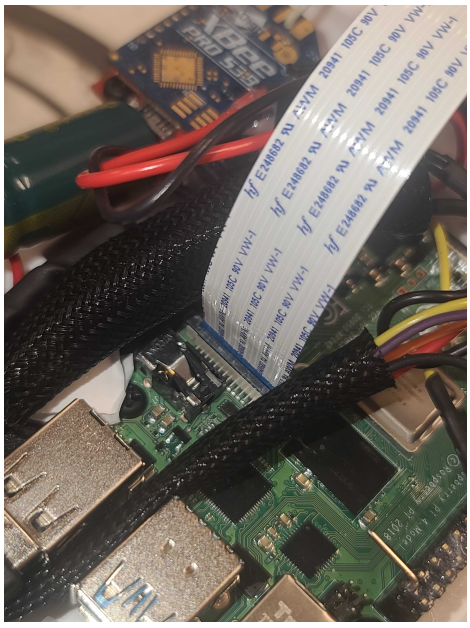

(b) Raspberry Pi Camera Module cable orientation.

Figure 4.15: Overview of camera-related hardware components.

4.4 Payload Flight Reliability & Testing

4.4.1 Overview

The WARHEAD's reliability in successfully executing the mission outlined in Section 4.1 has been thoroughly evaluated through multiple Vehicle Verification & Testing (VV&T) procedures. This section provides an overview of the test results and their impact on flight reliability. It also summarizes the verification testing performed on the STEMCRaFT and WARHEAD, with detailed methodologies and resources available in Section 8.2.

4.4.2 Hardware Reliability

Battery Life and System Endurance

The WARHEAD was initialized and run for a minimum of 3 hours to ensure that the batteries could support the system for an extended time under load. This test also verified that the software could handle running for a significant amount of time without failing, simulating launch pad conditions.

Nose Cone Retention

The Nose Cone with STEMCRaFT underwent a drop test to evaluate the payload retention system and electronic mounting under simulated landing forces. The payload retention system functioned as expected, and the electronics remained securely mounted and operational after being subjected to a direct impact onto the tip of the Nose Cone.

4.4.3 Flight Behavior

Simulated Flight

A script was made that used previous flight data to simulate a flight. This allowed for the verification of the FSM as well as the transmission system's activation upon landing.

FSM verification

Since the FSM is based entirely on the DPS310 pressure sensor, a vacuum chamber can be used to mimic flight conditions. Once the WARHEAD is inserted into the chamber and sealed, a vacuum can be pulled. This simulates an increase in altitude which will trigger all of the respective states and verify their functionality. This was especially useful for ensuring state change logic and the initialization of the transmission system upon landing.

4.4.4 Data Collection

FUSE Data Collection

The sensors have been connected to an ESP32 which is set up to read and format all of the data. The data has been verified to be accurate and formatted correctly to be in a readable configuration for the flight computer.

Data Collection Flight

On January 25th, a preliminary version of the payload was launched to verify the sensors were able to record data throughout the flight. This confirmed the functionality of the FUSE.

4.4.5 Transmission Viability

Transmission Decoding

The APRS transmission was received with a BAOFENG UV-5 handheld connected to a laptop running DireWolf. This makes the transmission message detectable, ensuring the proper format and that the APRS signal can be decoded through the noise.

Transmission Range

The WARHEAD's SWITCH was tested at a long distances to determine reliability in realistic landing scenarios. At a distance of 2000ft, the WARHEAD was placed inside the Nose Cone, and a transmission signal was sent at different orientations & polarizations. All tests passed. See Sections 8.2.6 and 8.2.7 for more details.

Antenna Polarization and Orientation

During the range test, multiple orientations and polarizations were attempted. While the transmission worked and was decoded for all positions, there was significantly weaker signal when the transmission antenna was facing directly towards or away from the receiver.

4.4.6 Remote Override Capabilities

Remote Override

The remote override system allows for a command of either ”stop” or ”transmit” to directly impact the state of the WARHEAD. The TORCH sends the remote override command to the WARHEAD via the XBee interface. This command has been verified to have been received by the WARHEAD and cause a state change to either transmit or stop transmission as required.

Remote Override Range

The remote override system was verified to work at more than twice the maximum drift distance calculated by recovery. This ensures the reliability of the system if it is needed to be used during the mission.

4.5 Payload Manufacturing

4.5.1 Payload Structural Manufacturing

The sled, top bulkhead, bottom bulkhead, and capsule shell were 3D printed using PETG filament. The sled was printed with 25% infill, while the capsule shell and both bulkheads were printed with 30% infill. All components utilized gyroid infill, chosen for its ability to provide strength in all directions.

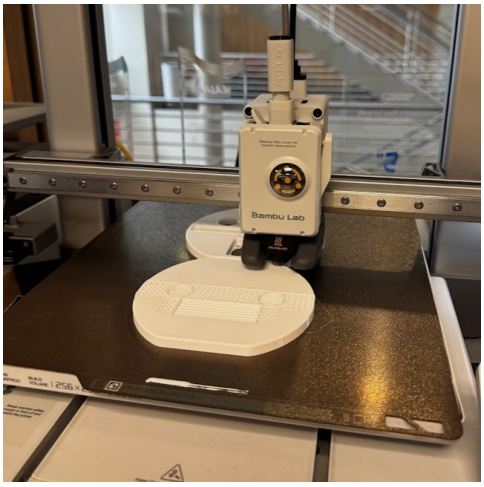

Figure 4.16: Payload bulkheads being 3D printed.

3D printing enables the creation of complex geometries that would be challenging to produce using traditional manufacturing methods. The sled takes advantage of this capability with hexagonal slots designed to securely hold hex nuts. The shape of the slot prevents the hex nut from rotating when inserted, allowing a screw to thread into it. This feature was utilized on the sides of the sled to secure the capsule shell. The hex nuts were sealed in place with hot glue to prevent them from falling out when the screw is not threaded in.

STEMnaut Housing

The STEMnaut housing is fully integrated into the bottom bulkhead as a single 3D-printed part. The window for the housing is cut from a 1/8” acrylic sheet. Two M3 hex nuts are embedded in the sides of the STEMnaut housing to provide mounting points for the screws that secure the window to the housing.

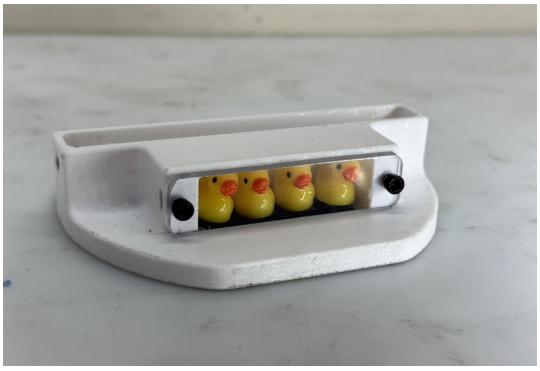

Figure 4.17: STEMnaut housing on the bottom bulkhead.

Each STEMnaut duck has a small piece of Velcro adhered to its bottom side, which engages with a corresponding Velcro strip on the floor of the STEMnaut housing, as shown in Figure 4.17. This guarantees the STEMnauts remain securely in place during flight.

Pull-Pin Switches

The STEMCRaFT requires two pull-pin switches, one for each of the two power subsystems. These switches were positioned in line with each other to allow for a single pull-pin hole in the Nose Cone, simplifying the system by requiring only one pull-pin for the payload on launch day. The housing for the switches was 3D printed and mounted to the sled using heat-set inserts and metal screws.

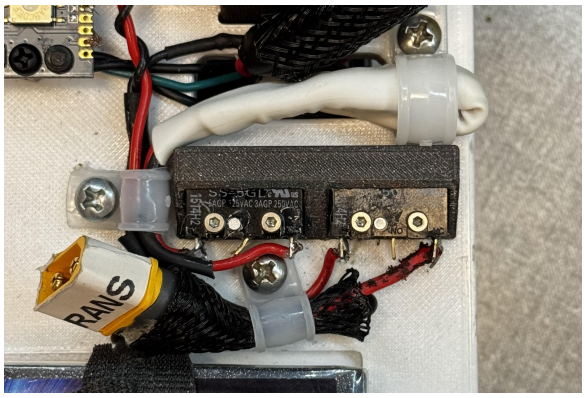

Figure 4.18: Double pull-pin switch on STEMCRaFT sled.

Electronics Mounting

All electronic components were mounted using a combination of heat-set inserts with nylon standoffs, hex nuts, and screws. The holes for the heat-set inserts were printed directly into the sled, eliminating the need for drilling and ensuring precise hole dimensions. The hole sizes were determined using a heat-set insert size chart. A soldering iron, set slightly above the melting point of PETG, was used to install the heat-set inserts.

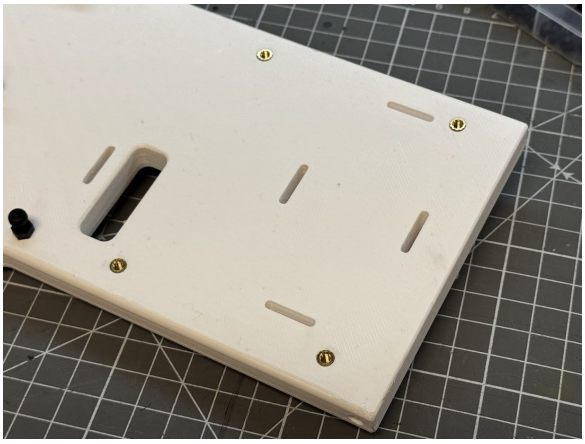

(a) Heat-set inserts installed on the STEMCRaFT sled.

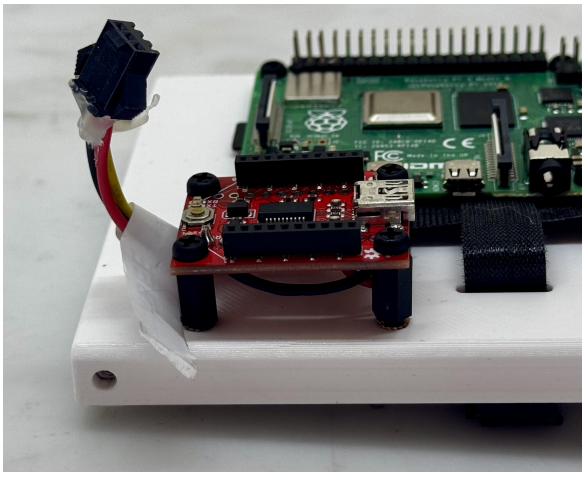

(b) XBee explorer board mounted with nylon standoffs and screws.

Figure 4.19: Images of the STEMCRaFT electronics mounting methods.

The electronic components were mounted to the heat-set inserts using nylon screws, with the exception of the pull-pin switches, which were secured with metal screws. Nylon was selected for its non-conductive and lightweight properties, and its slight flexibility helped to accommodate any misalignment of the heat-set inserts.

Standoffs and hex nuts act as spacers, preventing components on the underside of the electronics from being compressed against the sled. This design ensures proper alignment and protects critical electronics from potential damage during flight and landing. The mounting methods described in this section were tested as outlined in Section 8.2.11 and verified to withstand landing forces.

Battery Fastening

The two batteries on the STEMCRaFT sled are secured using Velcro straps, with each battery having two straps positioned in perpendicular directions. Small slots in the sled allow the Velcro straps to pass through and wrap around the backside, ensuring a secure retention method. This design offers both a reliable way to mount the batteries and a quick and reusable solution for future use.

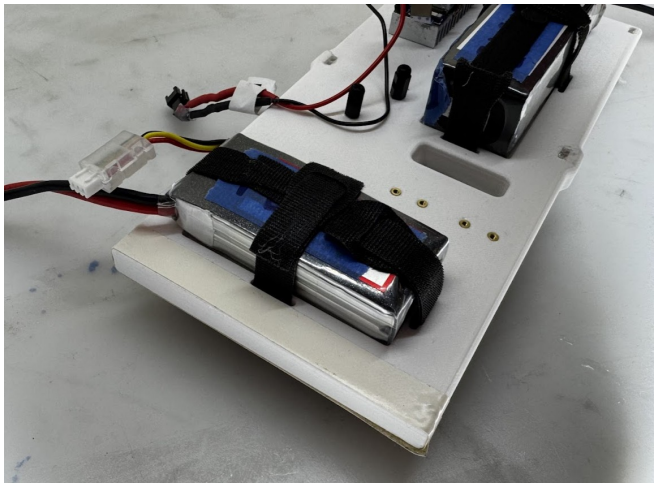

Figure 4.20: Batteries retained using Velcro retention system.

Wiring/Connection Retention

The wiring and connection of electrical components were crucial in the manufacturing process of the STEMCRaFT. Soldering was used as the primary method for creating electrical connections, while heat shrink was applied where necessary to cover exposed wires and provide strain relief. In other areas, hot glue was used to alleviate stress on the wires and prevent soldered connections from being damaged. Cable management was implemented using cable clamps and wire looms to organize wires and prevent them from getting caught during assembly when the sled is inserted or removed from the capsule shell. Multiple JST connectors were integrated into the system, allowing for easy removal or replacement of components if issues arise. These methods, along with the retention techniques described in Section 4.5.1, ensure that all electronic components are secured using two methods of retention, which satisfies the team derived requirement PF.8.

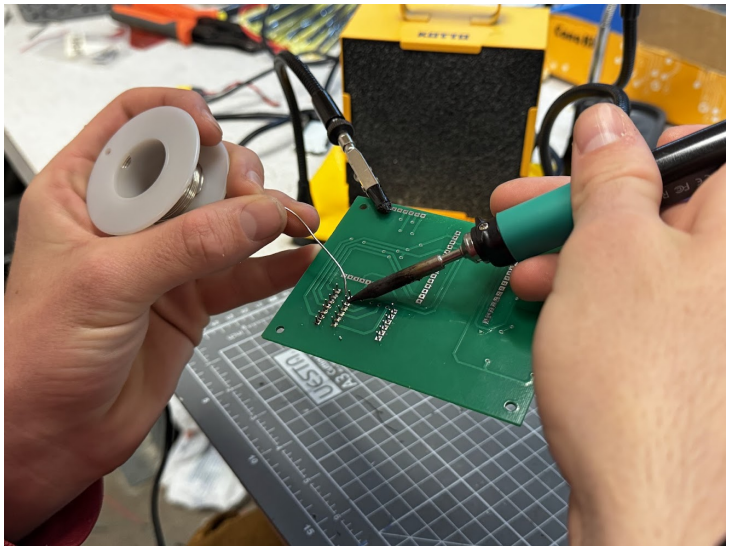

(a) Soldering sensors to the PCB.

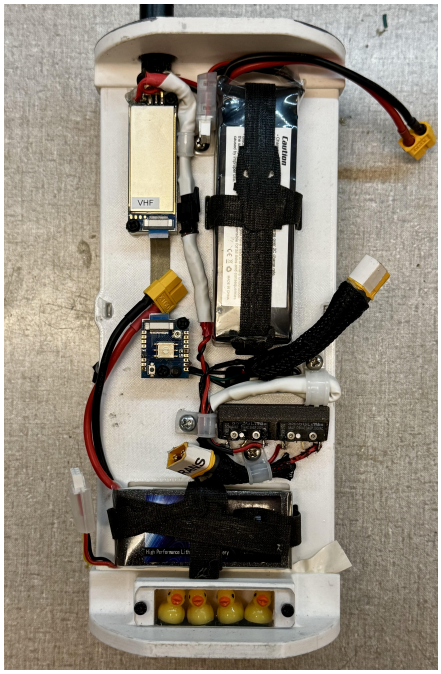

(b) Cable management on the sled.

Figure 4.21: Soldering and cable management on the sled.

4.5.2 Payload Electronics Manufacturing

As-Wired WARHEAD Schematic

Shown below in Figure 4.22, is the finalized wiring of the manufactured WARHEAD. This schematic includes the exact wiring used and is based upon the complete version of the WARHEAD, with only minor differences from any previously designed wiring.

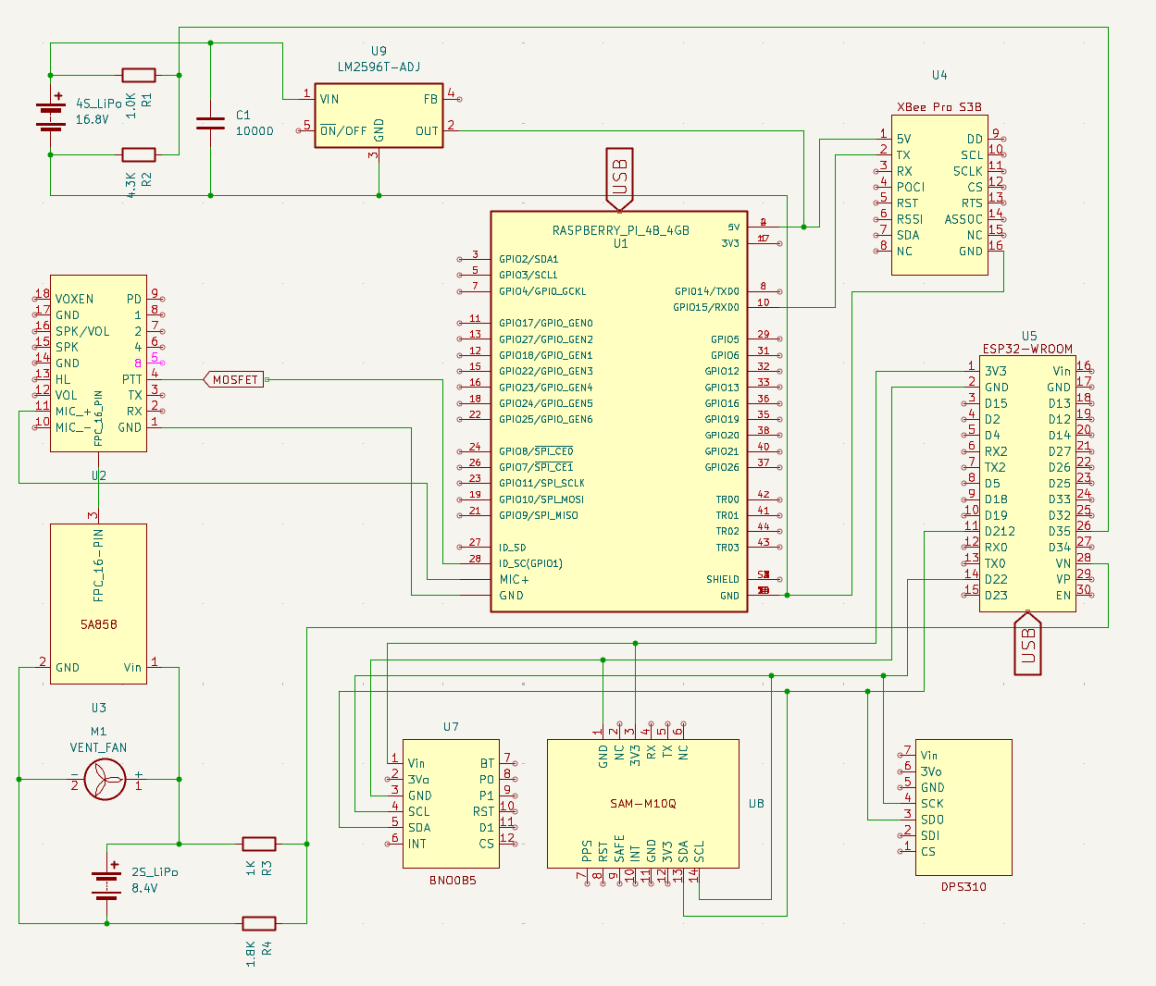

Figure 4.22: Full as-wired WARHEAD schematic.

All wiring directly to the WARHEAD's Raspberry Pi is done using a 2x20 female pin header block. All wire connections were soldered directly onto the header block's pins and heat-shrunk to minimize any risk of a wire being torn loose. In addition to providing additional wiring strength, this also allows the wiring to be easily removed during assembly, as the header block may simply be removed from the Raspberry Pi.

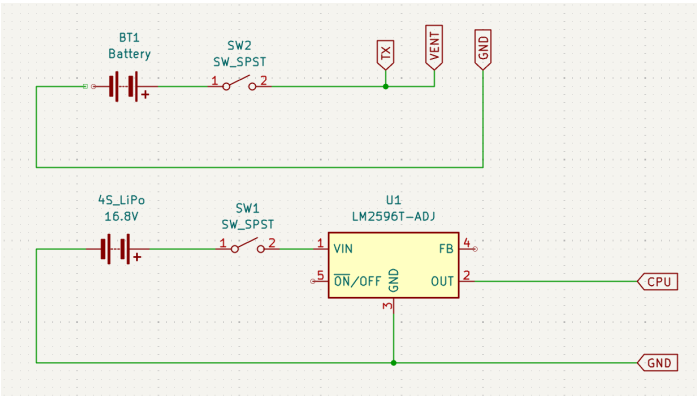

(a) As wired dual pull-pin schematic.

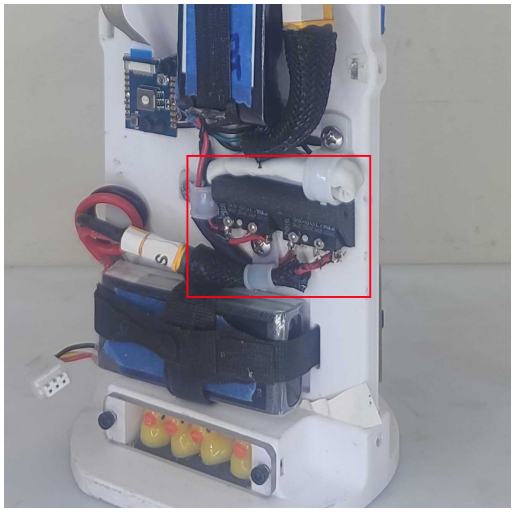

(b) Dual pull-pin located on WARHEAD.

Additionally, a short 2 channel 3.5mm to 3.5mm audio cable is used to connect the Raspberry Pi's audio output to the MIC input of the SA858. This wire was cut at the desired length, and the inner left and right channels were spliced together into a mono connection. This connection was soldered directly to the pins of the SA858-PJ. The ground wires within the cable were similarly spliced together and soldered directly to the ground pins of the SA858-PJ. Lastly, the CPU utilizes a short 3 inch, data compatible, USB cable in order to receive serial data from the FUSE subsystems ESP32.

Over the next few sections, the various subsystems will be discussed in further detail. Additionally, each section will highlight the electronic design, and the components location onboard the STEMCRaFT.

Data Collection PCB

As discussed in the teams CDR milestone document, the team utilized an iterative design process while working on the PCB for the FUSE Data Collection subsystem. Shown below is an image of one of the early prototype PCB boards used to mount the various electronics contained within the FUSE data collection subsystem.

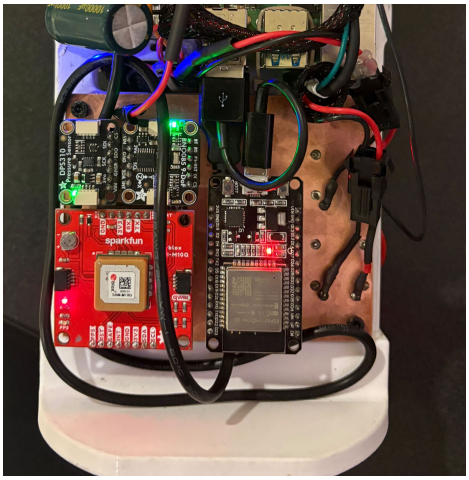

(a) Prototype CNC milled FUSE PCB.

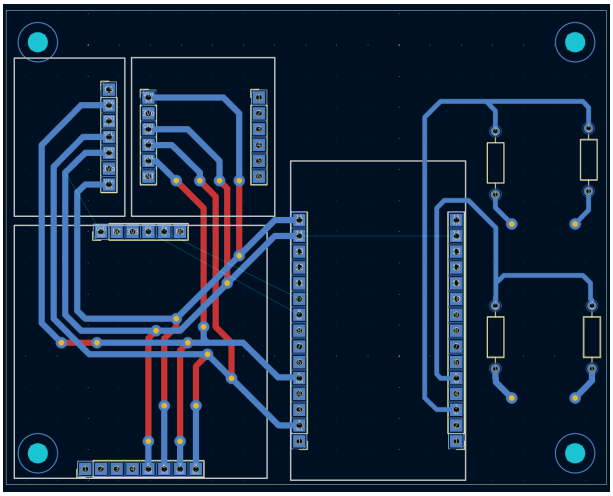

(b) Schematic of manufactured PCB.

Figure 4.23: Layout of FUSE PCB.

This CNC milled version of the FUSE PCB was utilized in the teams data collection flight performed on January 15th. Upon confirmation that the PCB was performing as intended and that the teams' design was viable, multiple identical PCB's were ordered from JLCPCB. The sensors have since been remounted on the manufactured PCB.

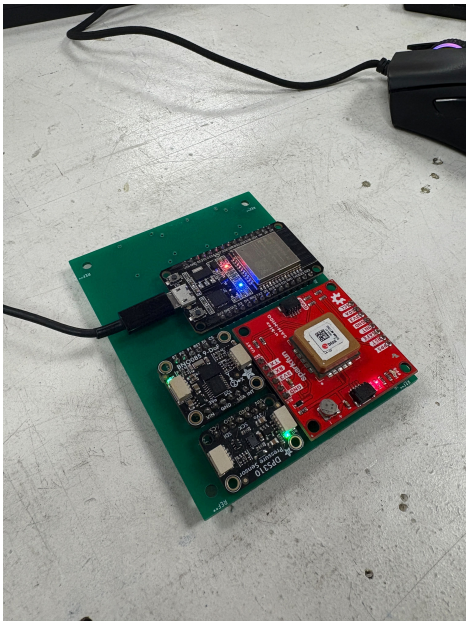

(a) Finalized FUSE PCB.

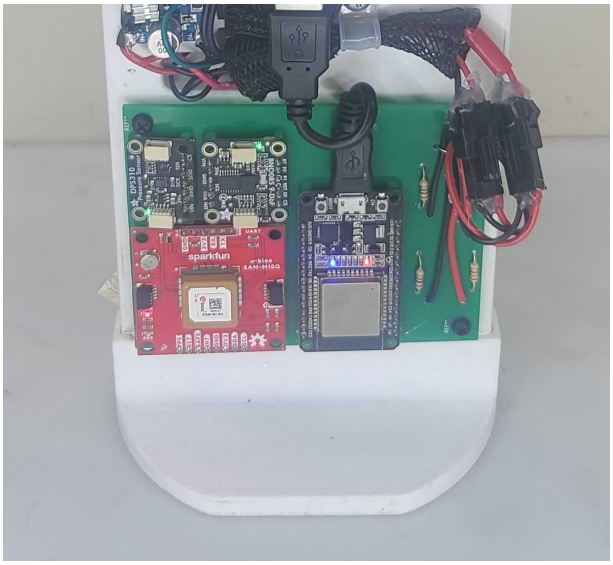

(b) FUSE mounted on WARHEAD.

Figure 4.24: FUSE PCB images.

Shown in Figure 4.24a is the finalized version of the FUSE PCB. The wiring and dimensions of this PBC follow schematics outlined in Figures 4.11a and 4.11b. As shown, each of the sensors are connected using the I2C communication protocol via the SCL and SDA pins of the sensor and ESP respectively. This sensor information is compiled into a binary data packet that is delivered to the WARHEAD CPU continuously at a frequency of roughly ~125 Hz. The FUSE PCB utilizes a USB serial connection in order to deliver data to the WARHEAD CPU, and two JST connectors that allow for the voltage drop circuits to be easily connected to two WARHEAD batteries as desired.

The primary manufacturing efforts required were soldering the sensors onto the PCB, as outlined in Section 4.5.1, and installing the voltage drop circuits that are used to determine battery voltages. The exact components used in these circuits are outlined in Section 4.5.2.

Voltage Regulator

The LM2596 is a step-down (buck) voltage regulator widely utilized in electronic projects for its ability to efficiently convert higher input voltages (16.8V) to a stable lower output voltage with up to 3A of continuous current. Operating at a fixed switching frequency of approximately 150 kHz, it uses pulse-width modulation (PWM) to regulate voltage, offering high efficiency (up to 80-90%). It also has built-in features, including current limiting and thermal shutdown, which are useful for the purpose of a power supply to the flight computer.

Shown in Figure 4.25a is a simplified version of the as-wired implementation of the LM2596. Note that this schematic does not include the power distribution from the Raspberry Pi to other onboard electronics.

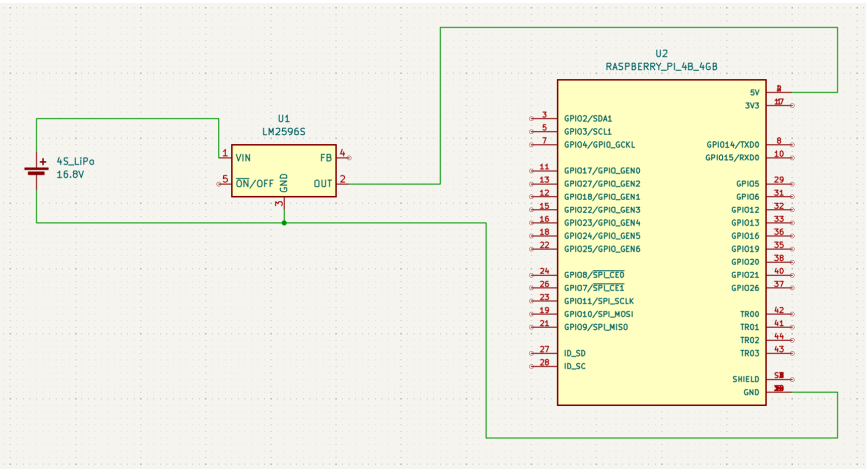

(a) As-wired LM2596 schematic.

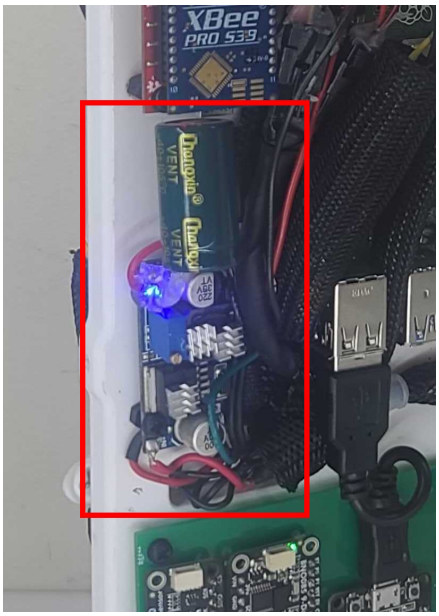

(b) LM2596 and capacitor located on WARHEAD.

Figure 4.25: LM2596 schematic and implementation.

This voltage regulator is configurable between 1.25V and 35V, and is configured at approximately 5V for its use in the WARHEAD. For this component, the 4S LiPo battery outputs are soldered directly onto the input terminals of the regulator and will deliver no more than 16.8V, well within the limitations of the LM2596. The output terminals of this buck converter are connected directly to wires that are run directly into the 5V and GND pins of the Raspberry Pi, allowing for the WARHEAD's Raspberry Pi to draw directly from the 4S LiPo battery and distribute power as needed. This regulator is mounted directly next to the Raspberry Pi.

The LM2596 now has a 10,000 F capacitor mounted directly on the input terminals. This capacitor simply serves to smooth out any voltage fluctuations and ensure a stable power supply during extreme flight conditions.

Voltage Drop Schematic

As covered previously, the FUSE will utilize a voltage drop circuit between the ESP32, and both of the batteries. As the ESP32 is only capable of reading up to 3.3V using an analog pin, the circuits were both designed in order to reduce the voltages of the batteries to acceptable ranges. The equations used are detailed in the following:

$$V_{out} = V_{in} * \frac{R_2}{R_1 * R_2} \tag{19}$$

$$8.4V * \frac{1000}{4300 + 1000} = 3V \tag{20}$$

$$16.8V * \frac{1000}{1800 + 1000} = 3.17V \tag{21}$$

The as-manufactured payload utilizes these exact resistor values in the voltage drop circuits. These circuits have proven efficient in VV&T testing, and the software has been coded to adjust these voltage levels appropriately to accurately read the battery life.

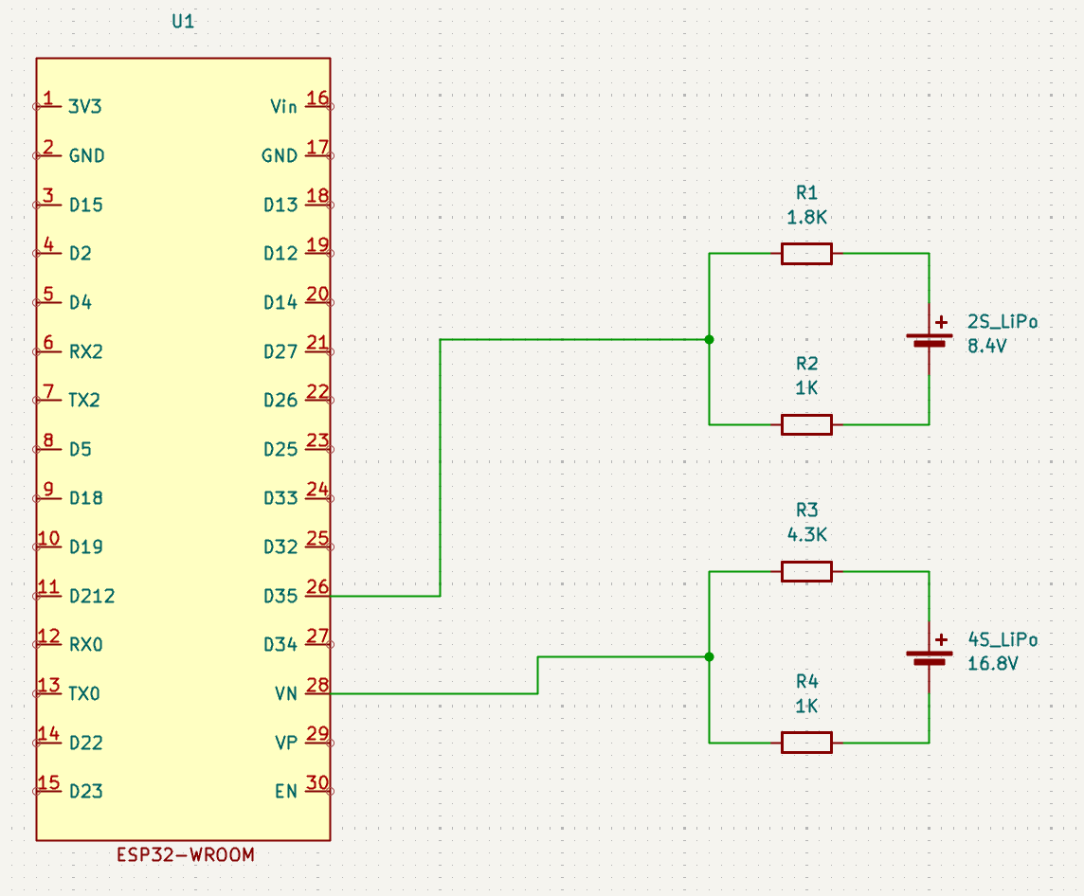

Figure 4.26: As-wired voltage divider circuit.

Shown in Figure 4.26 is the as-wired schematic and its interface with the ESP32 of the FUSE system. Note that the VN and D35 pins are both analog compatible pins on the ESP32. These circuits are manufactured using simple thru-hole axial resistors and large vias onboard the PCB. While assembling the PCB the legs of the resistors were simply fed through the via holes and soldered to the board. Once soldered in place, any excess leg length was trimmed from the resistor.

MOSFET Switch

A MOSFET (Metal-Oxide-Semiconductor Field-Effect Transistor) is employed to pull a Push-To-Talk (PTT) line low. The MOSFET is configured with its source connected to ground, its drain tied to the PTT line, and its gate controlled by a 3.3V signal from a GPIO pin on the Pi. 3.3V is sufficient to turn on an N-channel MOSFET designed for logic-level operation. When the 3.3V signal is applied to the gate, the MOSFET conducts, pulling the PTT line low to initiate transmission, and removing the signal turns it off.

Shown in Figure 4.27a, is a schematic of the wiring between the Raspberry Pi's GPIO pin, the IRLB8721PBF MOSFET, and the PTT pin on the SA858 module.

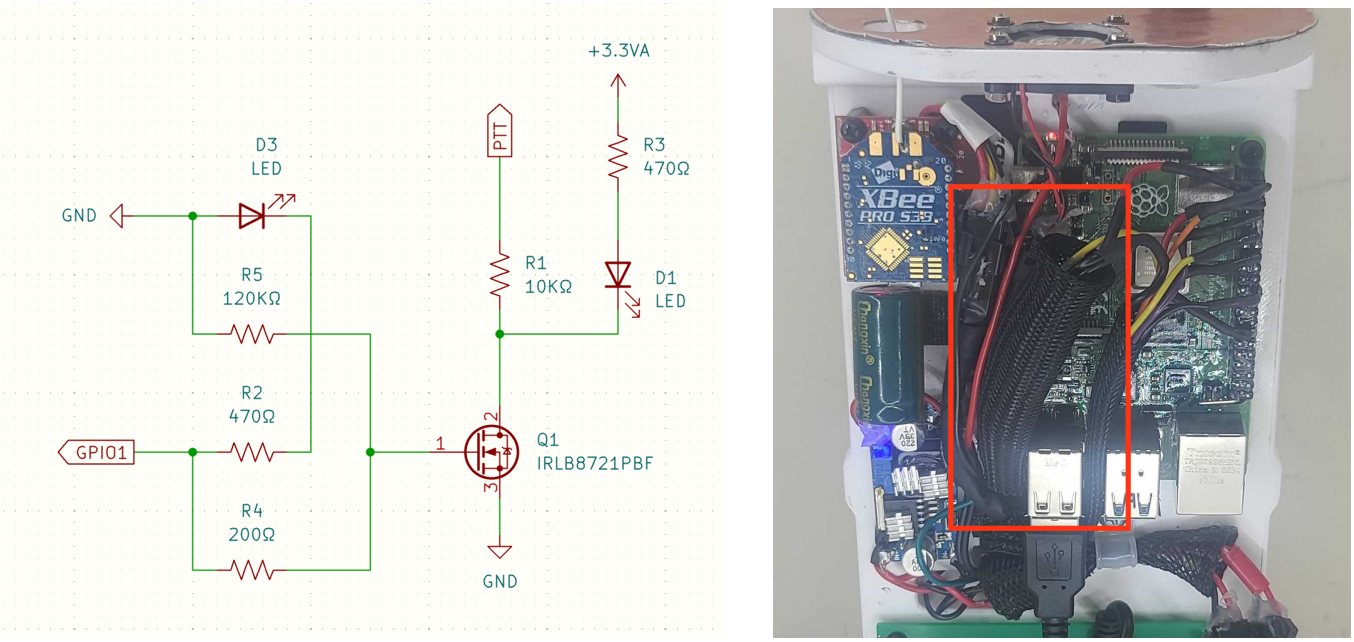

(a) As-wired MOSFET schematic.

(b) MOSFET located on WARHEAD.

Figure 4.27: MOSFET schematic and its physical location on WARHEAD.

This schematic includes multiple passive components that protect against potential current surges and improve reliability when pulling the system high or low. Both indicator LEDs are connected in parallel with the primary control lines and are current-limited with 470-ohm resistors (R2 and R3), as shown in the schematic. This setup allows the logic level of the MOSFET's gate and source channels to be visually determined. Having indicator LEDs makes it more efficient to verify correct wiring when arming the WARHEAD. The LEDs are also leveraged as a valid method to protect the WARHEAD's Raspberry Pi CPU from back EMF.

Additionally, the schematic includes a pull-down resistor and a pull-up resistor to ensure that the MOSFET is triggered only when intended. A 120K-ohm pull-down resistor holds the gate low until the Raspberry Pi GPIO pin is fully pulled high. Similarly, a 10K-ohm pull-up resistor holds the PTT pin on the SA858 high until the MOSFET is activated, at which point the PTT pin is pulled low. These resistors act as safety barriers, ensuring that the logic level of the system remains stable and is not unintentionally switched.

This circuit is manufactured using an in-line wiring method, minimizing the need for additional circuit boards. All passive components are soldered directly to their connective wires and have heat shrink applied to ensure a tight connection. With the entire circuit manufactured, the wires are wrapped in a wire loom, allowing for minimal loose wires and improving wire management. The LED's remain visible and are placed at the exits of the loom, allowing the team to actively monitor the circuit as needed.

SA858 Transmission Schematic

Shown in Figure 4.28b is the as-wired configuration of the SA858 transmitter. As shown in the diagram, the team is utilizing the SA858-PJ breakout board which is connected to the SA858 transmitter via a 16-pin ribbon cable. This breakout board provides increased wiring flexibility and allows for easier adjustment of transmitter settings.

During installation, the team used RFNice software to configure the SA858 to the required settings. This process ensured that all channels were programmed to operate on the 144.390 MHz frequency, which is required for the mission's APRS transmission. A backup SA858 unit has also been programmed with identical settings, allowing for a quick replacement if the currently mounted transmitter needs to be swapped for any reason.

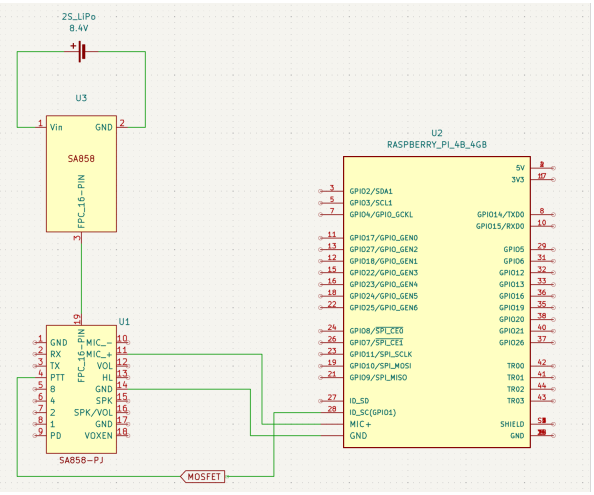

(a) As-wired SA858 transmitter schematic.

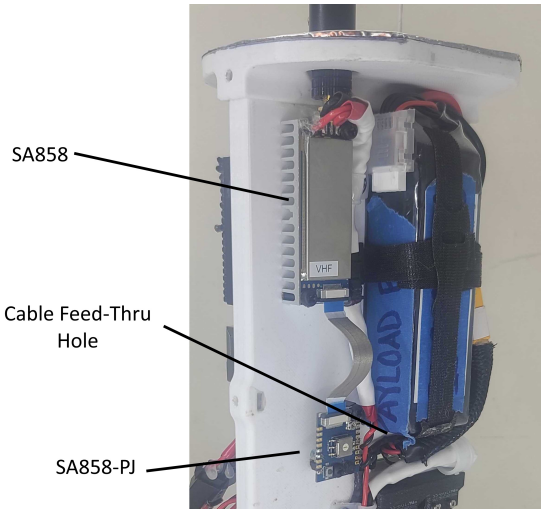

(b) SA858 transmitter located on WARHEAD.

Figure 4.28: SA858 transmitter schematic and implementation.

The SA858 transmitter is wired directly to the 2S LiPo battery, which powers both transmission and ventilation. It is also connected to the SA858-PJ module via a 16-pin ribbon cable. The SA858-PJ interfaces with the WARHEAD CPU through a common ground connection, a microphone connection, and a PTT line, which is routed through the MOSFET switch to a GPIO pin (as discussed in Section 4.5.2, not fully shown for clarity).

This system enables the Raspberry Pi to initiate an APRS transmission by outputting an audio signal, pulling the GPIO pin high, and triggering the SA858 to broadcast on the 2M band.

Pull-Pin Schematics

The final major electric component used within the WARHEAD is the dual pull-pin switch used to control power. This switch allows for a single pull-pin to be inserted from the outside of the launch vehicle, and cuts power to both batteries used within the warhead. The electrical schematic for the as-built version of this component is included below.

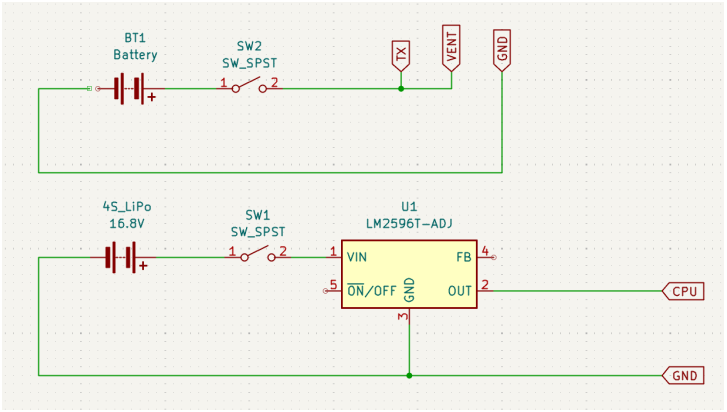

(a) As-wired dual pull-pin schematic.

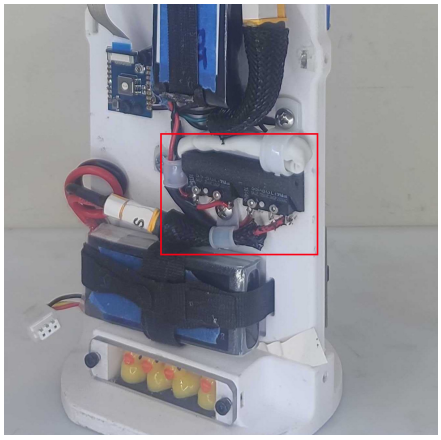

(b) Dual pull-pin located on WARHEAD.

Figure 4.29: Dual pull-pin schematic and implementation.

This system contains two SS-5GL pull-pin switches mounted in a single housing, and aligned linearly in order to allows a single pull-pin to close both circuits. This pull-pin housing was 3D printed, and aligned with two heat-set inserts on the primary payload sled to allow for the pull-pin switches to be mounted easily, and securely. Additionally, a small hole was included on the capsule of the WARHEAD, and the Nose Cone. These small holes enable the team to access the pull-pin from the exterior of the launch vehicle, allowing for battery of the WARHEAD to be conserved prior to flight, and up until the launch pad.

The wires connected to the terminals of the pull-pin switches have been wound around the terminals and soldered. Additionally, the team has applied hot glue in order to provide a layer of protection form any incidental contact with other electrical components.

4.5.3 Manufactured Payload vs. Theoretical Payload

Significant Dimensional Differences

Below are the updated dimensional drawings for the STEMCRaFT based on the actual built model.

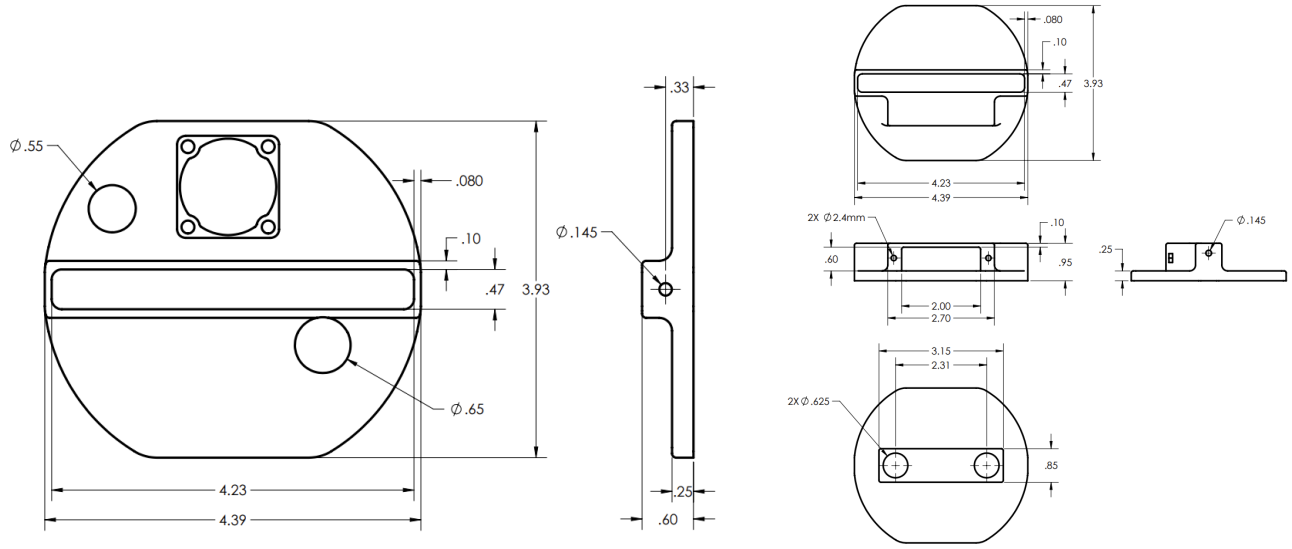

(a) Top Bulkhead dimension drawing (in.).

(b) Bottom Bulkhead dimension drawing (in.).

Figure 4.30: Top and bottom bulkhead dimension drawings.

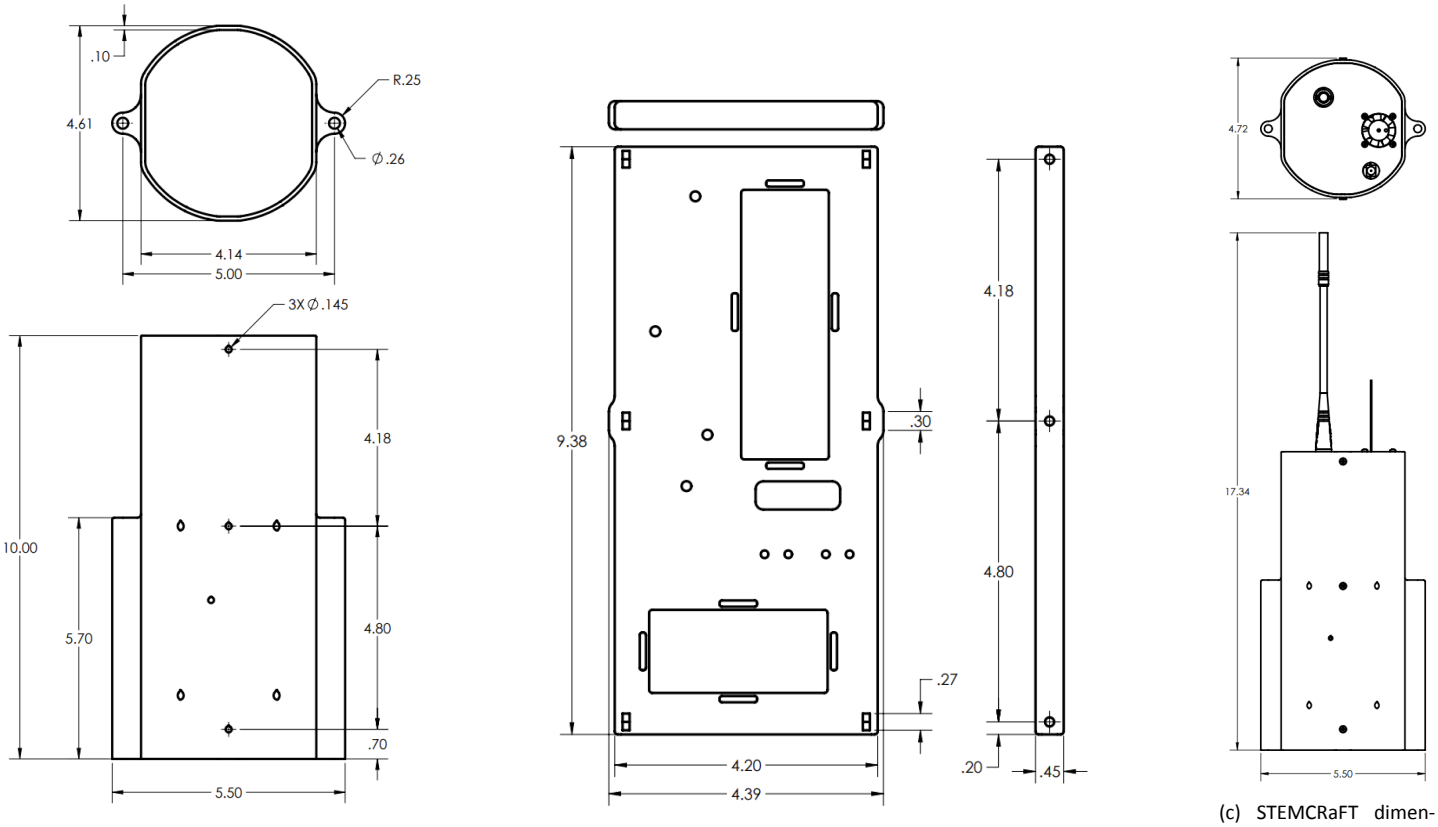

(a) Capsule Shell dimension drawing (in.).

(b) STEMCRaFT sled dimension drawing (in.).

(c) STEMCRaFT dimension drawing (in.).

Figure 4.31: Dimension drawings for capsule shell, sled, and STEMCRaFT.



Figure 4.32: Measured STEMCRaFT height.

The primary modification from the CDR design is the increased length of the STEMCRaFT. This adjustment was made to accommodate a larger 4S LiPo battery and provide additional space for the wires inside the capsule. Both the capsule shell and sled lengths were extended by 1.5 inches, bringing the capsule shell length to 10 inches. Additionally, the SA858 was repositioned higher on the sled, placing the bottom of the transmission antenna at the top of the top bulkhead. This change was implemented to create a ground plane for the antenna, enhancing its performance. As a result, the overall height of the STEMCRaFT increased from 13.44 inches to 17.34 inches. The measured height of the STEMCRaFT is just over 17.25 inches. This small difference is due to slight variations between the antenna CAD model and real model. This modification does not impact the integration of the STEMCRaFT into the Nose Cone.

Significant Mass Differences

The estimated mass of the STEMCRaFT in the CDR document was 2.25 lb, while the final constructed mass is 2.55 lb. The primary factors contributing to the weight increase include the switch from a 2S to a 4S LiPo battery and the extension of the sled and capsule shell lengths by 1.5 inches. Additionally, some components, such as wires, cable management parts, and hot glue, were either not accounted for or could not be accurately measured. These factors collectively account for the 0.30 lb increase in weight. This increase does not significantly affect the launch vehicle's performance.

4.6 System Operations

The STEMCRaFT operates through a finite state machine (FSM) with seven distinct states: Standby, Burn, Coast, Drift, Landed/Transmission, and Shutdown. The mission begins with initialization at the launch pad, triggered by pull-pin removal, followed by high-frequency data collection during the Burn phase using the DPS310 and BNO085 sensors. GPS data from the SAM-M10Q stabilizes post-landing to provide coordinates. After landing, the Raspberry Pi encodes data with Direwolf and transmits this as an APRS signal via the SA858, with the ground station monitoring for any transmission. An XBee Pro is also utilized in the ground station as a means of overriding the transmission functionality should it be required. The system then enters Shutdown, preserving battery life until recovery, while remaining responsive to retransmission commands.

4.7 Payload Demonstration Flight

The full-scale launch of the WARHEAD on 03/08/2025 was a complete success from a safety perspective, with no personnel injuries and no unintentional transmissions occurring at any point during the mission. All pre-launch procedures, including test transmissions and data collection checks, were performed successfully, confirming that the system was functional prior to the launch vehicle being setup on the launch pad.

The payload retention system performed flawlessly during the flight. The STEMCRaFT remained securely housed in the Nose Cone between the permanent ring and removable bulkheads. The hex nuts on the removable bulkhead stayed fully tightened, and no damage to the retention hardware was observed post-flight. Additionally, the STEMCRaFT's structural housing functioned as expected. The capsule shell remained undamaged and securely fastened to the sled and bulkheads. Additionally, the electronics were well protected, with all components, including batteries, remaining firmly secured by screws and Velcro straps.

Based on the mission success criteria as outlined in 5.1.2, the flight was classified as a failure in this category due to a faulty USB cable connecting the ESP32 (FUSE subsystem) to the Raspberry Pi CPU. This issue was replicable during post-launch analysis and caused the serial connection to cut in and out intermittently. The existing WARHEAD code was not designed to handle repeated serial disconnects and reconnects, leading to a loss of data collection and transmission functionality.

The USB cable had been used to pass all VV&T tests prior to this launch and had been used successfully in ground based testing, indicating that the issue was likely due to recent wear and tear. This failure was only observed after the WARHEAD was already on the launch pad and detached from the teams primary laptop, meaning that this issue was not caught prior to the launch.

Following this failure, corrective actions have been taken to ensure greater electronics reliability, in both hardware and software. The faulty USB cable has been replaced, and additional error-handling code has been implemented to allow the Raspberry Pi to detect and recover from serial communication failures automatically without crashing. Since replacing the USB cable, the team's VV&T tests have continued to perform as expected, helping to verify that the system is now functioning at the same reliability level as before launch.

4.8 Payload Additional Flight

An additional flight is planned on March 29 to verify the WARHEAD's performance. Prior to this launch, the team will replace faulty electronic hardware and improve code reliability in error handling. The purpose of this additional flight is purely to verify the WARHEAD's ability to autonomously complete its mission while experiencing actual flight forces.

This launch will be the team's final flight before the competition in Huntsville. No hardware or design changes will be made between the submission of this document and Huntsville, except for the replacement of damaged components with identical models as necessary.

5 Air Brakes

5.1 Air Brakes Mission Statement and Success Criteria

5.1.1 Mission Statement

The objective of the Air Brakes system is to control the drag of the rocket during its ascent to guide the rocket to a target apogee. This will be accomplished by deploying Air Brakes fins to alter the reference area of the rocket, which subsequently changes the force of drag of the rocket throughout the flight. By strategically deploying and retracting the fins, the system can manage the rocket's ascent trajectory, slowing it down as needed to reach the desired target altitude.

5.1.2 Success Criteria

Table 5.1: Air Brakes Success Criteria

Level of Success	Payload Criteria
Complete Success	Apogee prediction algorithm generates a flight profile that allows the control system to deploy Air Brakes and retract Air Brakes to reach an altitude within 4% of the target height when overshooting AND do not deploy when undershooting the target apogee.
Partial Success	Apogee prediction algorithm generates a flight profile that allows the control system to deploy Air Brakes and retract Air Brakes to reach an altitude within 10% of the target height when overshooting AND do not deploy when undershooting the target apogee.
Partial Failure	Apogee prediction algorithm generates a flight profile that allows the control system to deploy Air Brakes and retract Air Brakes to reach an altitude within 30% of the target height OR deploy when undershooting the target apogee.
Complete Failure	Apogee prediction algorithm fails to generate a flight profile in time OR the Air Brakes control system fails to deploy Air Brakes OR the altitude reached is greater than 50% of the target height.

5.2 Air Brakes Changes Since CDR

Since the Critical Design Review, several modifications have been implemented to ensure the Air Brakes system remains operational and reliable:

- **Servo Replacement**: The original DS2685BLDP servo was non-operational out of the box. After extensive troubleshooting, the manufacturer suggested returning it for further inspection. Due to limited time before the initial VDF attempt and severe weather, a new servo would not have been shipped within 10 days. Therefore, the single servo was replaced with two smaller DS3235 servos, each rated to 486 oz-in. These are controlled via a PCA9685 servo driver, which communicates with the flight computer over I2C protocol and provides precise PWM signal generation for synchronized actuation. This change was necessitated by a delayed replacement delivery, caused by severe cold weather that disrupted shipping operations before the VDF launch. This led to a redesign of the actuation method to accommodate the already available DS3235 servos.
- **Gearing Design**: The central-gear system's original 1:5 ratio was modified to a 1:1.5 ratio to integrate two servos driving the central gear. This adjustment minimizes torque loss at a negligible cost to actuation speed, ensuring sufficient force for fin deployment and retraction.
- **Flight Computer Hardware**: The Raspberry Pi 4B was replaced with a Raspberry Pi 5 due to technical issues with the STEMCRaFT payload. During testing of the SWITCH, the STEMCRaFT's Raspberry Pi 4B failed, and with no backup available before the VDF launch (and the Raspberry Pi 5 lacking an audio jack port required for STEMCRaFT), the Air Brakes' Raspberry Pi 4B was repurposed for the STEMCRaFT's WARHEAD, leaving the Air Brakes system with the only available Raspberry Pi 5.
- **Power System Adjustment**: Following a failed battery life test (see Section 8.2.16), the original configuration of two separate 2S LiPo batteries (7.4V, 2200mAh) was replaced with a single shared 4S LiPo (14.8V). This change ensures sufficient battery life for the entire flight duration. Since the PCA9685 servo driver isolates power to the Raspberry Pi, a separate power supply and pull pin switch for the servos is unnecessary to prevent brownouts during servo stalls, simplifying the power system while maintaining reliability.

5.3 Air Brakes Design Overview



Figure 5.1: Fully assembled Air Brakes mechanism.

The final Air Brakes design utilizes a staggered actuation system to control fin deployment, controlling drag, and guiding the rocket to a target apogee. Two servos are each fixed with a 20 tooth gear which drives a 48 tooth central gear. This central gear is coupled to a larger 74 tooth gear, which makes up the diameter to reach all four 20 tooth gears attached to the fins. The resulting servo-fin gear ratio is 1:1.54 and allows for much more torque at the fins than the previous design, despite having an overall weaker servo output than the single servo. The Raspberry Pi 5 serves as the flight computer to process IMU and encoder data, as well as execute a Bang-Bang control scheme to deploy and retract fins based on a predicted flight profile. Figure 5.1 shows the assembled Stacked Air Brakes Module. From forward to aft, there is the Staggered Actuation Mechanism, the servo and encoder sled, 4 spacers, a Raspberry Pi sled, 4 spacers, and finally the IMU & battery sled.

5.3.1 Structural Elements

The structural components include:

- **Threaded Rod**: Four 1/4 #20 threaded rod pass through the AVAB and act as mounting surfaces as well as hinges for the Air Brakes fins to rotate about.
- **Housing**: 3D printed in PETG at 25% infill, enclosing the gear system and mounting to the switchband via integrated nuts and machine screws.
- **Fins**: Four 3D-printed fins (PETG at 25%), pivoting on a threaded rod with bearings to reduce friction and wear.
- **Washers & Bearings**: A roller bearing between 2 washers is placed on either side of an air brakes fin.
- **Electronics Sleds**: 3D-printed sleds (PETG at 25%) secure the Raspberry Pi, IMU, PCA9685 driver, Batteries, and wiring across 2 different sleds in a stacked arrangement within the AVAB.

5.3.2 Electrical Elements

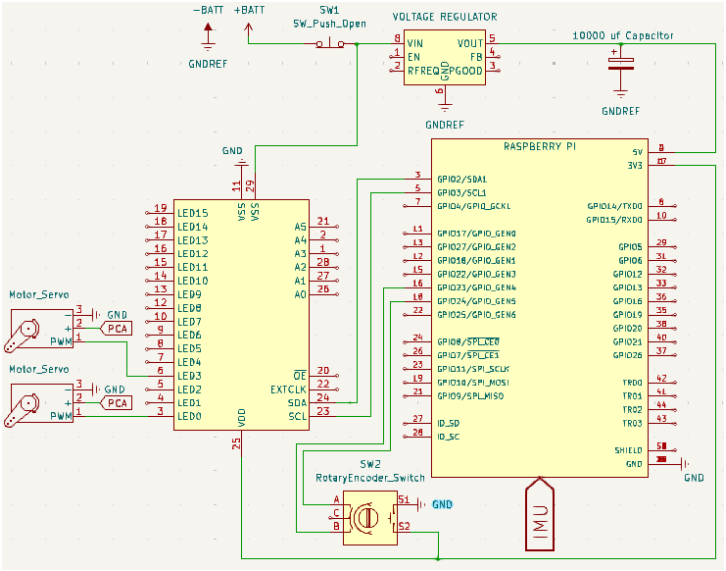

Figure 5.2: Air Brakes electrical schematic.

With reference to Figure 5.2 above, the electrical system is composed of:

- **Servos**: Two DS3235 SG, powered by a 4S 2200mAh LiPo at 16V and controlled via a PCA9685 driver.
- **PCA9685**: A servo driver powered by 3.3 volts from the Raspberry pi with I2C protocol.
- **IMU**: Provides acceleration, quaternion, altitude, and gyro data at 500 Hz over USB serial to the Raspberry Pi for flight data.
- **Raspberry Pi 5**: Acts as the flight computer, managing data logging, apogee prediction, and servo control.
- **Encoder**: Tracks fin angular position for feedback and post-flight analysis. Interfaced via SPI.
- **Power**: One 2200mAh 4S LiPos provides power for the servos and the Raspberry Pi. Flight computer brownouts are prevented by the use of a PCA9685 servo driver, while pull-pin switches are used to arm/disarm the system from outside the rocket.

5.4 Air Brakes Flight Reliability

Flight reliability has been validated through rigorous testing and a successful launch:

- **Ground Testing**: Pre-flight tests confirmed dual-servo synchronization, gear system durability, and software accuracy using simulated IMU data. All of the tests can be found in Sections 8.2.13 and 8.2.14.
- **Successful Air Brakes Flight**: On February 22, 2025, the system achieved a target apogee within 1.05% of the target apogee of 4000, meeting complete success criteria. The fins deployed and retracted as intended, with the Raspberry Pi 5 maintaining active control of the system throughout the flight. More details can be found in Section 6.2.4 and 8.2.15.

5.5 Air Brakes Manufacturing

The manufacturing process uses 3D printing and manual assembly:

- **3D Printing**: The housing, fins, gears, and sleds are printed using PETG at 25% infill on either a Prusa MK4 Original or a Bambu A1. This method allows for rapid prototyping and cost effective production of complex geometries.
- **Air Brakes Assembly**: The fins are inserted into their corresponding fin slots on the housing. A washer-bearing-washer is placed between the top of the fins and the housing as well as the bottom of the fins and the housing. 2 fins are staggered in height which requires 2 'short' fins and 2 'tall' fins to keep the central gear in contact with all 4 geared fins. Figure 5.3 shows the bearings

  Threaded rods are then passed through the housing to hold the washers, bearings, and fins in place. The central gear is mated in the center to synchronize all 4 fins.



Figure 5.3: Washer/Bearing assembly.



Figure 5.4: 3D printed components.



Figure 5.5: Top view of Staggered Actuation Mechanism.

The servo sled, containing both servos and the encoder, is then attached to the 4 threaded rod. After ensuring the servos are mechanically in sync (by powering them on and setting them to a target position) the servo sled can be mounted to the bottom of the housing, ensuring that the servo & encoder gears mesh into the central gear.



Figure 5.6: Top of servo sled.

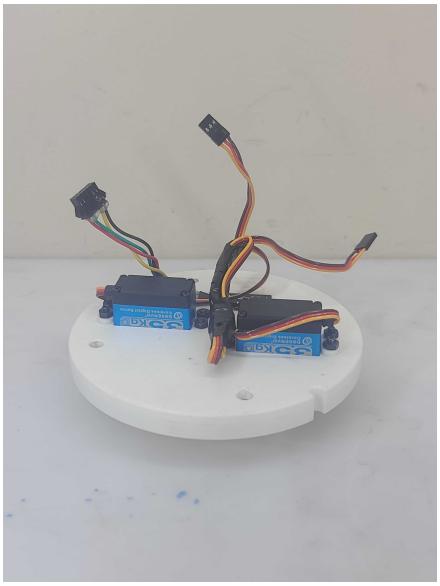

Figure 5.7: Bottom of servo sled.

Four long spacers are then slid along the threaded rod followed by the raspberry pi sled. The Pi sled includes a pull pin switch and the PCA9685 driver board. The encoder and servos are plugged into their respective spots (Figure 5.7 & Figure 5.9). Four short spacers are then installed.



Figure 5.8: Long spacers next to a short spacer.

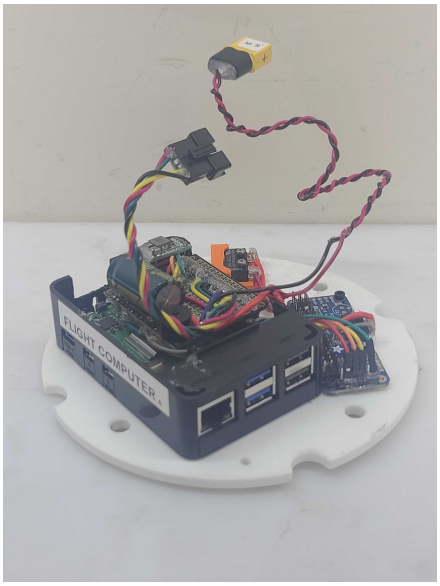

Figure 5.9: Raspberry Pi sled.

Lastly, the IMU and Battery sled (see figure 5.10 and 5.11) is installed and connected, completing the assembly of the Stacked Air-Brakes Module.



Figure 5.10: Bottom of IMU sled.



Figure 5.11: Top of IMU sled.

5.6 System Operations

The Air Brakes system is designed to regulate the rocket's ascent and achieve a target apogee by increasing drag via fin actuation. The system integrates hardware control, data processing, and logging in a continuous loop, ensuring real-time responsiveness during flight. Each iteration of the operational cycle includes:

1. **IMU Data Collection**: The IMU delivers acceleration, quaternion, altitude, and gyroscopic data at 500 Hz over USB serial, providing the raw inputs for further processing.
2. **Data Processing**: The flight computer finds velocity, orientation, and similar metrics from the accelerations and altitude provided by the IMU data. It then prepares inputs for state logic and apogee prediction.
3. **State Management**: The current FSM state is updated with processed data, managing the deployment system based on flight phase.

4. **Apogee Prediction**: During the Coast phase, the Weighted Height Judgment (WHJ) software uses an algorithm to predict the current flight profile using real-time altitude and velocity, which is then fed into the control algorithm. An example of this can be seen in Figure 5.12.

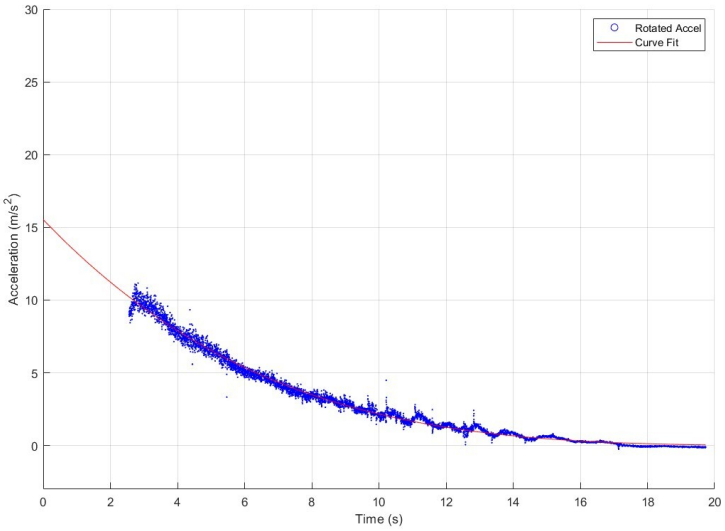

Figure 5.12: Curve fit of the apogee prediction.

5. **Control Loop** Seen in figure 5.13, the WHJ software uses the current velocity and the predicted flight profile compared with the current height to determine if the system need to deploy or retract Air Brakes.

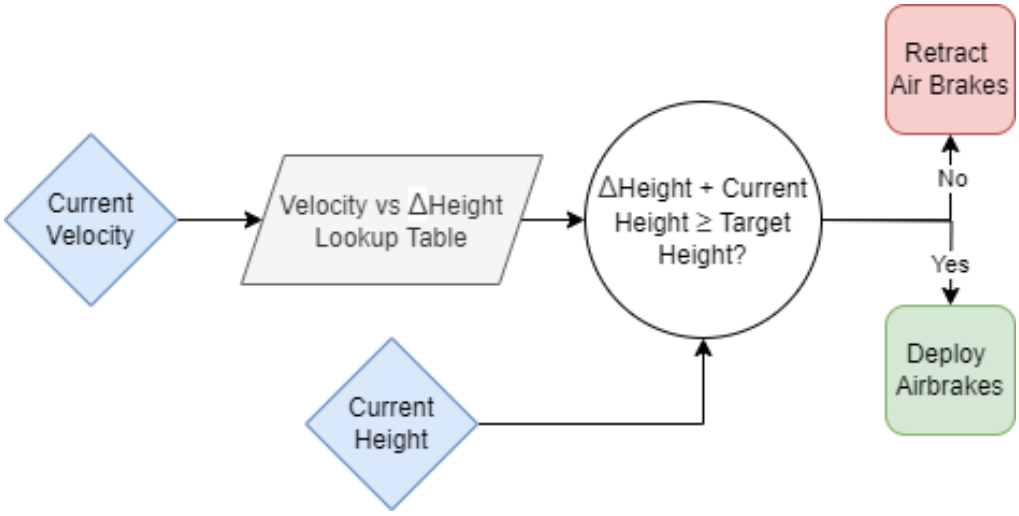

Figure 5.13: Diagram of control logic.

6. **Servo Actuation**: Two DS3235 servos, controlled via a PCA9685 servo driver over I2C, adjust fin positions (extend or retract) based on state-driven commands, leveraging the 1:1.5 gear ratio for precise drag control.
7. **Data Logging**: All data including IMU readings, processed metrics, servo positions, and state transitions are logged for post-flight analysis.

The FSM comprises five states, each tied to a distinct flight phase, as validated by the successful February 22, 2025, launch:

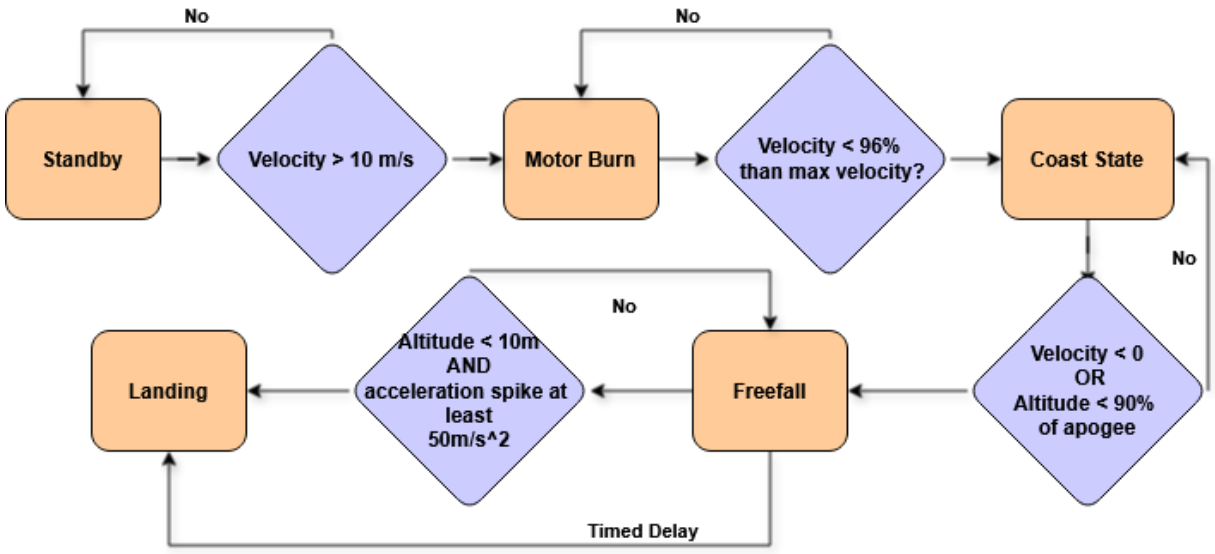

Figure 5.14: Finite State Machine logic.

As seen in Figure 5.14, the state machine consists of Standby, Motor Burn, Coast, Freefall, and Landing.

- **Standby**: The rocket is stationary on the launch rail, with the flight computer armed. The Raspberry Pi 5 initializes hardware (IMU, PCA9685, encoder) and monitors the velocity to transition to Motor Burn.
- **Motor Burn**: Triggered by exceeding 10m/s, this phase logs data without fin actuation.
- **Coast**: The system transitions to Coast when the velocity is less than 96% of the max velocity, indicating burnout. As the rocket ascends, the Weighted Height Judgement software utilizes a prediction algorithm which uses IMU-derived velocity and altitude to generate a flight profile. Once the prediction converges on an accurate flight profile, the WHJ utilizes a Bang-Bang controller to deploy the fins when the velocity exceeds the target apogee trajectory, increasing drag to slow the rocket. The fins retract when the predicted apogee aligns with the target apogee, transitioning to Free Fall when velocity < 0m/s or the altitude < 90% of apogee.
- **Free Fall**: During Freefall, the fins are retracted and Data is logged. Landing state is triggered when altitude is < 10m and there is an acceleration spike of at least 50m/s^2.
- **Landing** A redundant timer is built in to also trigger landing state transition and is based on the maximum descent time based on main at apogee. 5 seconds after landing is detected, the system shuts down.

5.7 Air Brakes Integration

The Air Brakes integrate into the Avionics and Air Brakes Bay (AVAB):

- **AVAB Structure**: Four threaded rods secure bulkheads and act as fin hinges, supporting the assembly within the airframe.
- **Fin Slots**: Four slots cut into the AVAB airframe allow fin deployment into the airstream, sealed by internal bulkheads to isolate avionics from pressure spikes.

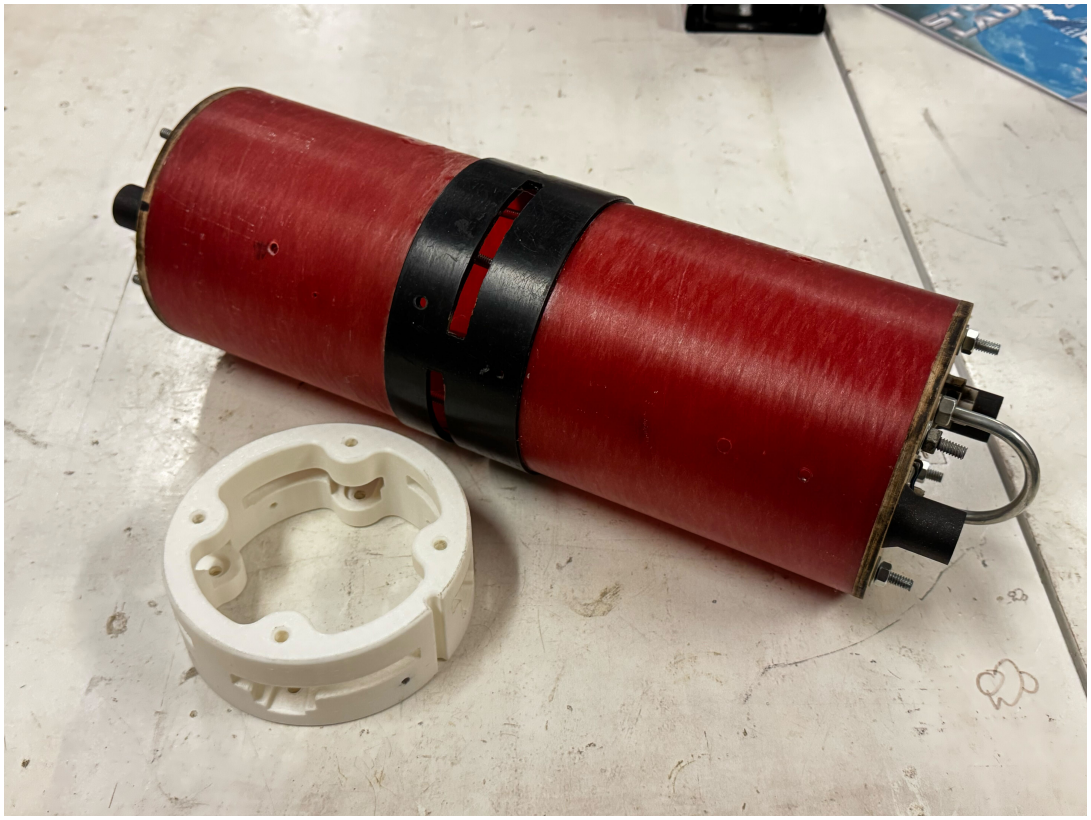

Figure 5.15: Air Brakes housing next to Switchband.

- **Mounting**: The housing attaches to the Switchband via four machine screws and embedded nuts, ensuring stability during flight.

Below is a mass breakdown of the entire Air Brakes subsystem:

Table 5.2: Mass Breakdown of Air Brakes Components

Component	Mass (oz)
IMU Battery Sled	13.26
4 Spacers - Small	0.14
Pi Servo Drive	6.55
Component (missed)	0.61
4 Spacers - Long	0.29
Servo Sled	8.44
Washer + Bearing + Washer ($\times 4$)	0.44
Center Gear	0.96
Tall Fin ($\times 2$)	1.34
Short Fin ($\times 2$)	1.24
Housing + 4 Nuts	4.11
Total	**37.38**
Assembled Total	**37.75**

6 Demonstration Flights

6.1 Demonstration Flight Overview

6.1.1 Launch Conditions

The Vehicle Demonstration Flight and Payload Demonstration Flight were completed on March 8, 2025 in Dalzell, South Carolina. At the time of launch, the temperature was 70 degrees Fahrenheit, the pressure was 99900 Pa, and surface level wind speed at launch was measured to be 13 mph. However, wind speed was changing constantly, frequently ranging from 10 mph to 20 mph. Winds aloft were significant, reaching up to 30 mph. Skies were clear.

Launch Pad Information

The vehicle was launched from a 8 ft. 1515 rail that was verified to be at a 5-degree cant away from the assembly area. The team typically utilizes a 4 ft. rail extension to match the full 12 ft. 1515 launch rails used in Huntsville, however, it was not available. The predicted rail exit velocity was simulated to be sufficiently high for Launch Vehicle stability upon exit from the 8 ft. rail. An AeroTech FirstFire high-power igniter was utilized for motor ignition and initiated via a Wilson F/X wireless electronic launch pad controller with a 12V power supply.

6.1.2 Motor Selection

The motor used for VDF was the AeroTech L1520T, the same as the selected competition motor.

6.1.3 Ballast

This flight was a fully ballasted flight, including 10 percent of full weight in the Nose Cone of the vehicle. This was 3.7 lbs of ballast in the Nose Cone.

6.1.4 Static Stability

The static stability of the fully ballasted LV configuration was 2.63. This value remains the same for both VDF and PDF (single flight on a single launch day).

6.1.5 Payload

The STEMCRaFT payload's retention system performed flawlessly, with all electronics remaining securely mounted throughout the entire flight. Post-flight inspection revealed no damage, and the payload experienced no structural issues.

The STEMCRaFT software was thoroughly tested and verified operational prior to launch. However, after successful launch pad checks and detachment from the ground station, the payload encountered an Input/Output exception on its serial connection to the data collection subsystem. This issue was found to be replicable and was traced to a faulty USB cable, along with insufficient error handling in the software. Immediately after the PDF flight, these issues were resolved by replacing the USB cable and improving software reliability, restoring nominal system performance. Due to worsening weather conditions, there was no opportunity to address this issue during the March 8th launch.

To further validate the software's ability to handle unexpected errors, the team plans an optional launch on March 29th. No design changes will be made between the submission of this document and the competition launch in Huntsville on May 3rd.

6.1.6 Air Brakes

The Air Brakes system was fully operational and it performed as expected for both VDF flight attempts. The first VDF flight attempt on February 22nd in Bayboro, NC was the club's first successful demonstration of the Air Brakes system. The flight computer using the Weighted Height Judgment software in conjunction with the Staggered Air-Brakes Mechanism was able to guide the rocket within 50ft (1.05%) of it's target apogee. The second VDF flight on March 8th in Dalzell demonstrated the restraint of the WHJ software when it predicted the rocket to undershoot its target apogee, keeping Air Brakes retracted the entire flight.

6.2 Vehicle Demonstration Flight

6.2.1 Altitude Prediction

Pre-flight simulations predicted an altitude for this flight at 4088 feet. However, the air brake target was over estimated 3700 feet. Due to high winds, the vehicle only reached an altitude of 3571 feet, which prevented air brakes from deploying as the target was undershot.

Altitude Prediction Discrepancies

There were significant discrepancies in the altitude prediction which is credited to extremely high and inconsistent winds, both on the ground and aloft, as well as significant weather cocking off of the rail. Furthermore, the launch rail used was shorter (8 feet as opposed to 12 feet) and significantly less stable than the one used in previous launches. Ground winds were measured to be up to 20 mph and winds aloft were measured to be greater than 30 mph. In the future, winds aloft will be implemented into simulations separately, as this is believed to have had a significant impact on apogee. The significant weather cocking is due to the significant Nose Cone ballast, 3.7

lbs, as well as the unstable launch rail. This also had a negative impact on apogee, as flight from the pad was not as vertical as simulated. Figure 6.1, below, shows the flight profile from this launch.

6.2.2 Flight Profile Data

During the Vehicle Demonstration Flight, the Perfect Flite StratologgerCF recorded an apogee of 3571 feet and the Altus Metrum EasyMini recorded an apogee of 3635 feet. This flight reached an off-rail velocity of 90.98 fps, with a maximum velocity of 446.92 fps and a mach of 0.40.

A plot of the flight profile data recorded by the StratologgerCF altimeter can be seen in Figure 6.1 below.

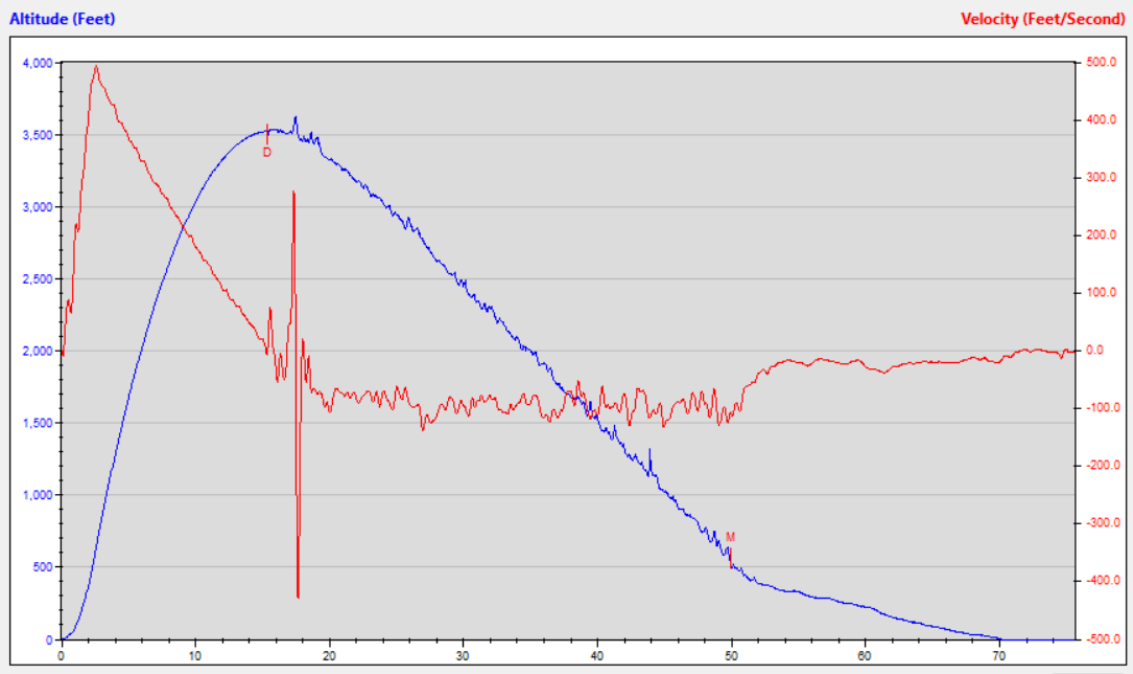

Figure 6.1: StratologgerCF flight profile graph during VDF

A plot of the flight profile data recorded by the EasyMini altimeter can be seen in Figure 6.2 below.

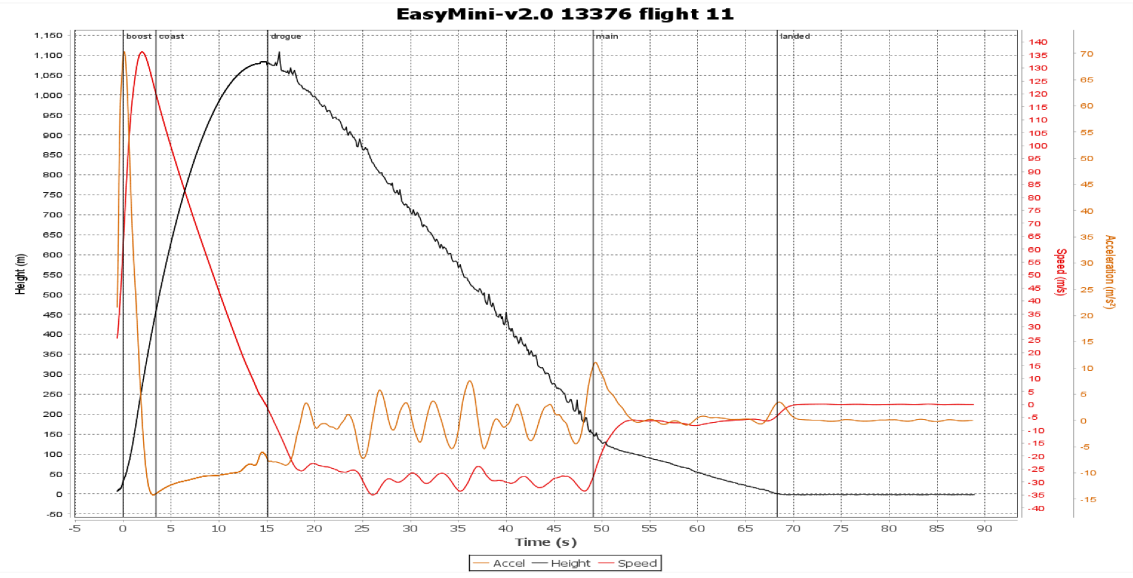

Figure 6.2: EasyMini flight profile data graph during VDF

The raw altimeter data from the Perfect Flite StratologgerCF and the Altus Metrum EasyMini have been submitted with the FRR package.

6.2.3 Recovery System

As shown in Figures 6.1 and 6.2 and in the raw data, the recovery system worked as intended. At apogee, the drogue parachute was deployed successfully. One second later, the secondary altimeter triggered the backup charge, which was not needed. At 550 feet, the main parachute was successfully deployed with a secondary charge at 500 feet that was again not needed. The Launch Vehicle then descended safely to the ground under the main parachute.

Landing Configuration

Figure 6.3a shows the Launch Vehicle during its descent under the drogue parachute. While the Launch Vehicle was descending under the drogue parachute, the Fin Can was falling slightly above the Main Parachute Bay and the drogue parachute. This was due to the large surface area of the Fin Can and fins compared to the surface area of the drogue parachute. This caused the main parachute to inflate below the Fin Can, which resulted in the drogue shock cord can hitting the main parachute and main parachute shock cord as it oriented itself below the main parachute for the remainder of the descent. This can be seen in Figure 6.3b. This resulted in binding of the main parachute shock cord around the Nose Cone bulkhead and U-bolt, shortening the distance between the Main Parachute Bay and the Nose Cone, and inverting the orientation of the Main Parachute Bay during descent. These events resulted in temporary deflation of the main parachute and slight tangling of the shroud lines, but did not otherwise affect the launch vehicle's descent. The remainder of the Launch Vehicle's descent under the main parachute can seen in Figure 6.3c below.



(a) VDF descent under drogue parachute.



(b) VDF main parachute deployment.



(c) VDF descent under main parachute.

Figure 6.3: VDF descent phases.

Figures 6.4a, 6.4b, and 6.4c show the configuration of the Launch Vehicle upon landing. Due to the high wind conditions at the launch field, the main parachute was collapsed before any photographs could be taken. This limited the likelihood that the Main Parachute Bay would strike recovery personnel, as it was lifted into the air prior to the collapse of the main parachute. Rubber bands were placed around the main parachute and photographs were taken before any sections were moved.



(a) VDF forward section landing configuration.



(b) VDF aft section landing configuration.

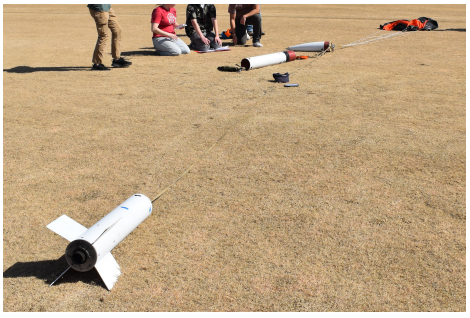

(c) VDF full landing configuration.

Figure 6.4: VDF landing orientation.

As shown in Figure 6.4, the Launch Vehicle landed as expected with the drogue parachute attached to the Nose Cone, the main parachute attached to the aft end of the AVAB, and all sections of the Launch Vehicle tethered together by the shock cord. There was minimal tangling of the drogue parachute shock cord around the aft end of the Nose Cone bulkhead which resulted from the main parachute deploying below the drogue recovery system. The Launch Vehicle was otherwise thoroughly inspected and it was determined that was no damage to the Launch Vehicle or the launch field upon landing. Additionally, the forward and aft AVAB bulkheads were checked and all four black powder charges detonated as expected. Overall the recovery system worked as intended.

Table 6.1 below compares the data from the Vehicle Demonstration Flight to the projected values as analyzed from the main altimeter flight data. The predicted values are based on the masses of the vehicle during the Vehicle Demonstration Flight and uses the recorded apogee of 3571 feet.

Since the Stratologger does not measure or compute velocity directly, the drogue and main descent velocities were calculated. The drogue descent velocity was calculated by dividing the change in altitude by the change in time during the drogue descent phase of the recovery, after the drogue parachute was fully inflated. The velocity at landing was calculated by dividing the change in altitude by the change in time over the last 50 recorded data points prior to landing.

Table 6.1: VDF Descent Data Comparison

Parameter	Actual Value	Predicted Value	Difference
Drogue Descent Velocity (fps)	91.4	105.3	13.2%
Velocity at Landing (fps)	16.4	17.3	5.4%
Total Descent Time (sec)	54.7	60.4	9.5%
Nose Cone Landing KE (ft-lbf)	46.4	51.8	10.5%
AVAB + Main Bay Landing KE (ft-lbf)	56.4	63.0	10.5%
Fin Can Landing KE (ft-lbf)	58.9	65.8	10.5%

The coordinates of the launch pad were 34.05083°N, 80.42119°W and the launch vehicle landed at 34.04867°N, 80.42297°W. This brings the total drift distance of the launch vehicle to 954.1 feet. From RocketPy, assuming a constant wind of 15 mph, the predicated drift distance for the flight was 668.6 feet - a considerable 29.9% difference.

The drogue and main descent velocities were relatively lower than expected. This is due to the inconsistent method in which the team is estimating the bluff body drag caused by the vehicle as it is falling. Due to the high winds during this flight, the vehicle fell almost completely horizontal resulting in higher body drag than expected. Despite the slower descent velocities, the total descent time was still faster than the team was expecting. This is likely due to the delay in main parachute inflation that can be seen in Figure 6.3(b). The delay in main parachute inflation caused the vehicle to fall only under drogue parachute for nearly a full second longer than expected which deceased descent time.

6.2.4 Air Brakes System

During the second and official VDF attempt on March 8th, the Air Brakes functioned properly by predicting that the flight path was lower than the target apogee. As designed, this resulted in the Air Brakes not being deployed for this flight. Seen in Figure 6.5 is the WHJ apogee prediction and altitude vs time, verifying that the Air Brakes successfully determined that they should not have been deployed.

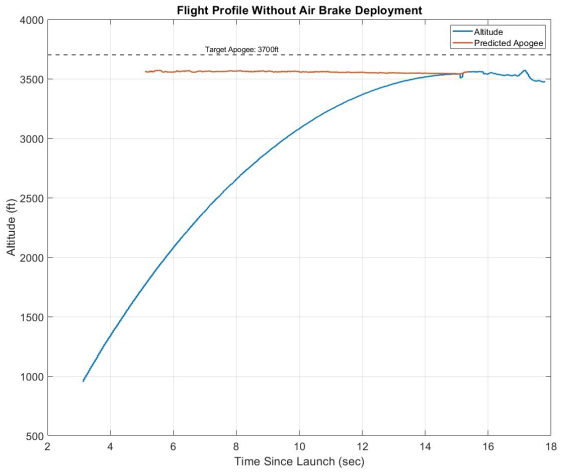

Figure 6.5: Second VDF attempt.

Conversely, for the first VDF attempt on February 22nd, the Air Brakes system outperformed expectations, guiding the rocket within 1.05% of its target apogee and meeting its full success criteria of 4%. OpenRocket and RocketPy simulations prior to flight anticipated an apogee of 4201 ft. During the flight, the on-board flight computer predicted an initial apogee of 4126 ft., which is within the allocated 2% error in accuracy. The target apogee for this ballasted flight was chosen to be at 4000 feet, and with successful Air Brakes deployment, the actual apogee was 3958ft.

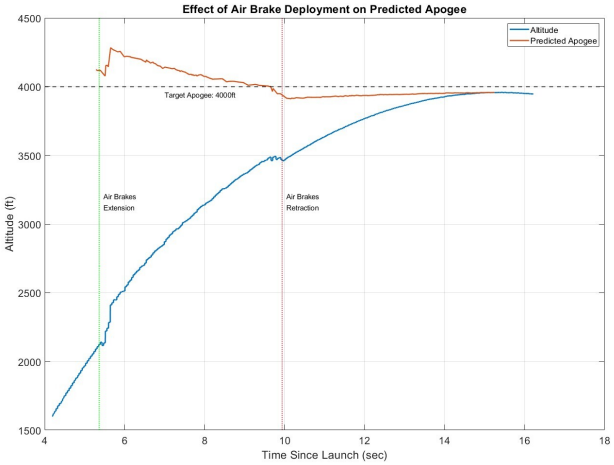

Figure 6.6: Altitude and WHJ predicted apogee vs time.

As seen in 6.6, the predicted apogee is higher than the target apogee at the point of prediction convergence, which causes the Air Brakes to extend the fins. During this extension period, the predicted apogee decreases until it coincides with the target apogee. At this point, the Air Brakes fins retract and the rocket coasts under its new flight path to the target apogee. The height discrepancy of 42ft is due to adverse pressure effects experienced inside the AVAB caused by fin deployment. Clear evidence of Air Brake deployment and control can be seen from the vertical acceleration graph overlayed with the encoded position of the fins during the flight. Figure 6.7 shows the trend of the vertical acceleration of the rocket. When the fins are deployed, graphed by the encoder position, a huge spike in negative acceleration is seen, which slowly tracks back to the original flight profile when fins are retracted.

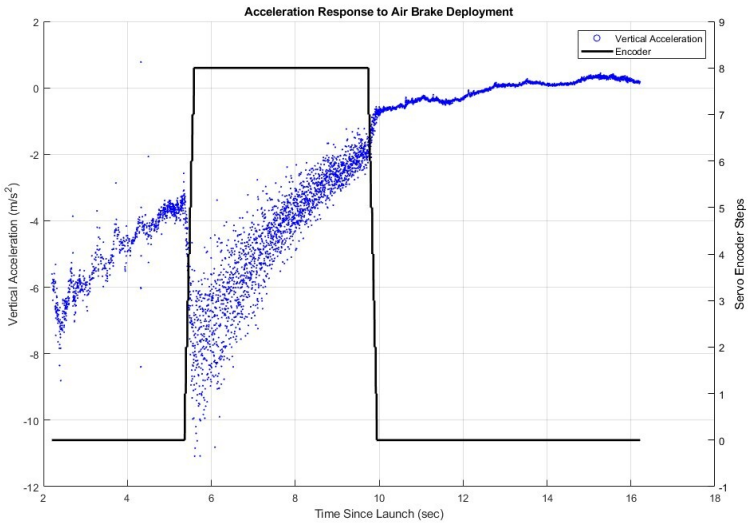

Figure 6.7: Vertical acceleration and Fin deployment vs Time.

During the first VDF attempt on February 22nd, the Air Brakes caused an increase in the coefficient of drag which can be seen in figure 6.8. On this graph, vertical lines mark the deployment and retraction of the Air Brakes fins. The coefficient of drag of the launch vehicle prior to deployment was calculated to be 0.42 and during fin deployment it jumped to 0.62, showing the Air Brakes increasing the coefficient of drag by 0.2.

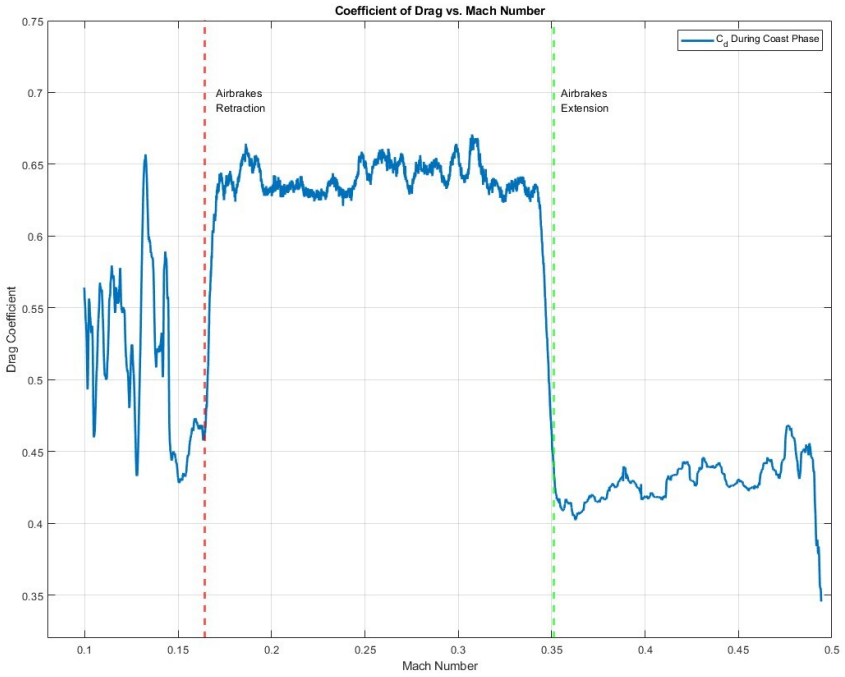

Figure 6.8: CD vs Mach.

6.2.5 Flight Analysis

Successful Systems

The Launch Vehicle structural components performed as expected. No damage was sustained to any part of the Launch Vehicle during flight or landing. All shear pins cleanly sheared between the airframe and coupler sections during drogue and main parachute deployment. All rivets remained firmly seated, connecting the Main Parachute Bay and AVAB. All machine screws in the switch band, RMFS, fins, and motor retainer remained secure upon post-flight inspection.

The recovery system performed as designed with drogue parachute deployment at apogee and main parachute deployment at 550 ft. With a maximum kinetic energy at landing under 65 ft-lbf, a descent time under 80 seconds, and a drift distance under 2500 feet, the recovery system was considered a success.

Air Brakes remained successful for both VDF flight attempts. As mentioned in 6.2.4, the first flight demonstrated the successful deployment of Air Brakes when overshooting the target apogee and the second flight showed that the Air Brakes remained retracted when undershooting the target apogee.

System Failures

During the Vehicle Demonstration Flight, the drogue parachute shock cord hit the main parachute as it was deploying, temporarily causing it to deflate. This resulted in a shorter distance between the Nose Cone and Main Parachute Bay during descent, but did not otherwise negatively impact the recovery system. Furthermore, the flight prediction was severely inaccurate due to weather conditions and significant weather cocking. More details on this can be found in Section 6.2.1.

Predicted vs Actual Flight Data

Below is a comparison of predicted flight against the actual flight. This comparison includes two figures, one without predicted air brake deployment, and one with. Due to the fact that the apogee was significantly undershot,the former is more applicable for analysis. As shown, apogee was over predicted by a margin of 517 feet, which is significant.

Figure 6.9, below, shows the predicted flight without air brake deployment compared to data from the primary altimeter. Air brakes did not deploy since the target, 3700 feet, was not reached.

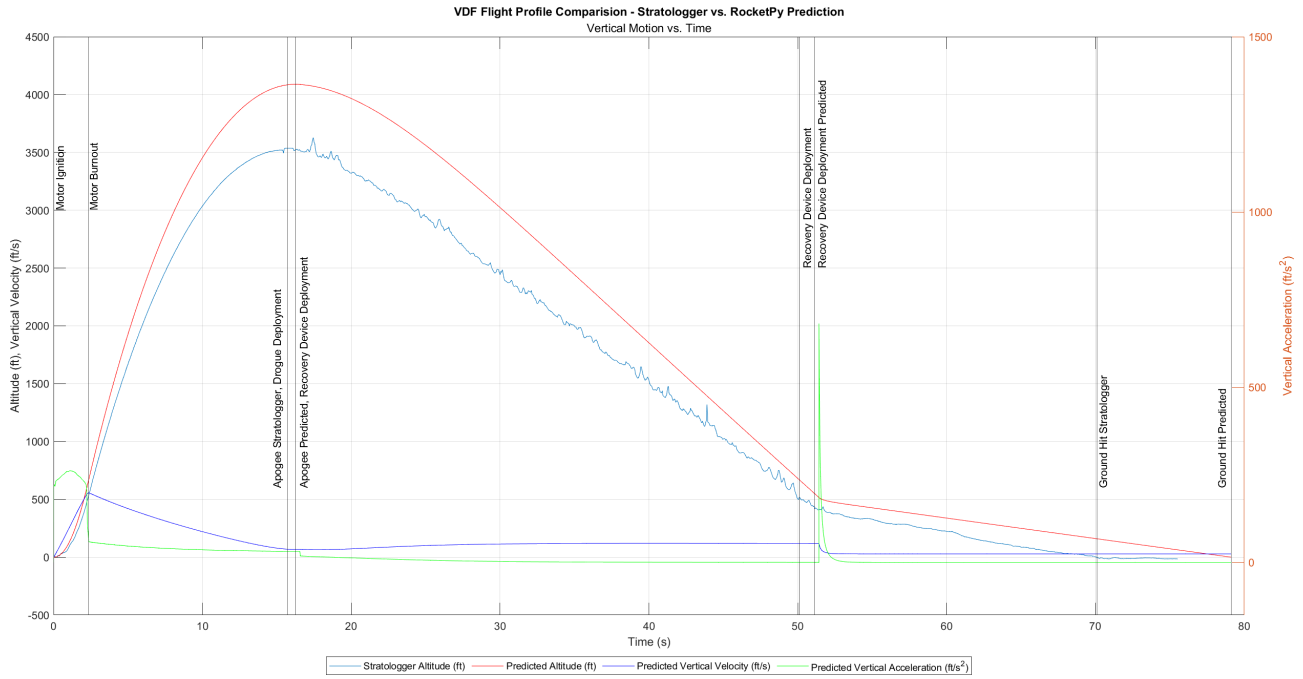

Figure 6.9: VDF Flight Profile Comparison

Figure 6.10, below, shows the predicted flight with air brake deployment compared to the data from the primary altimeter. In order to reach the target of 3700 feet, air brakes would have needed to deploy at approximately 1722 feet. However, this did not apply, due to the inaccuracy of the simulated flight.

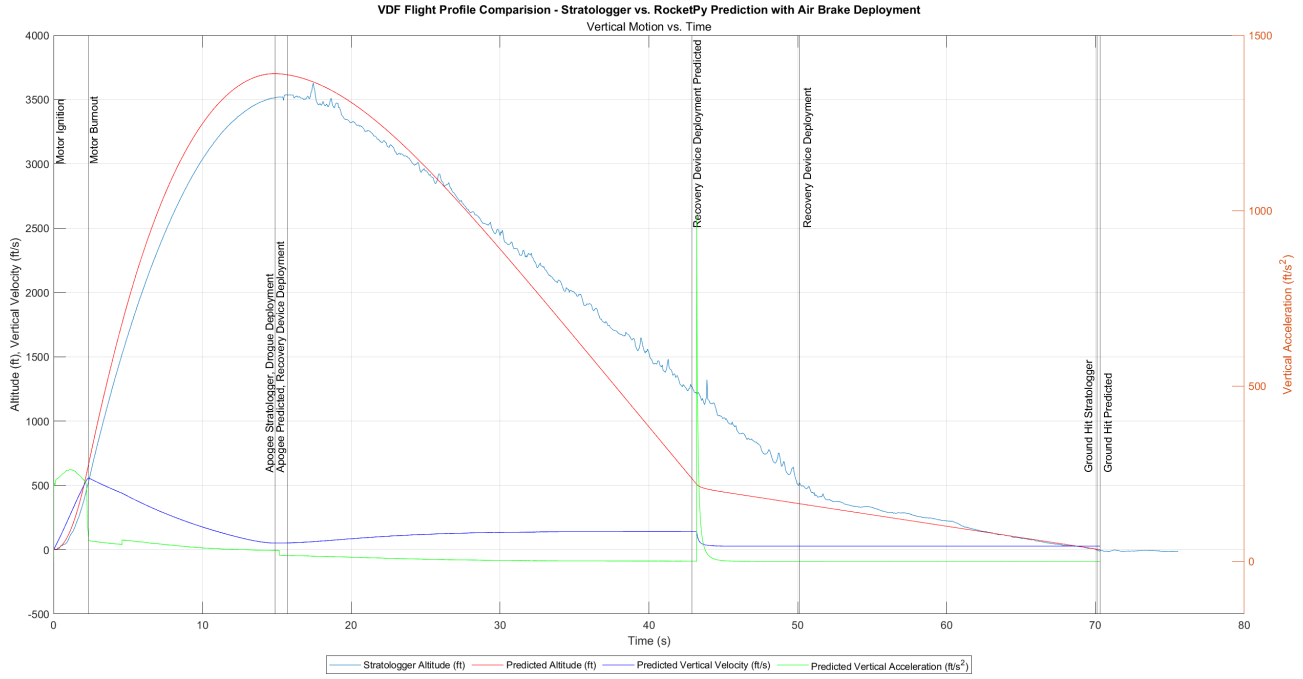

Figure 6.10: VDF Flight Profile Comparison with Air Brake Deployment

Off-nominal Events

Significant wind speeds and weather cocking occurred during this flight. Wind speeds significantly impacted simulation accuracy, preventing the vehicle from behaving in a predictable manor and forcing it to undershoot the target apogee. Seen in figure 6.11, the rocket starts at close to 0 degrees from vertical while on the rail, then quickly weathercocks to 25 degrees. This factor played a huge role in the inaccurate apogee predictions.

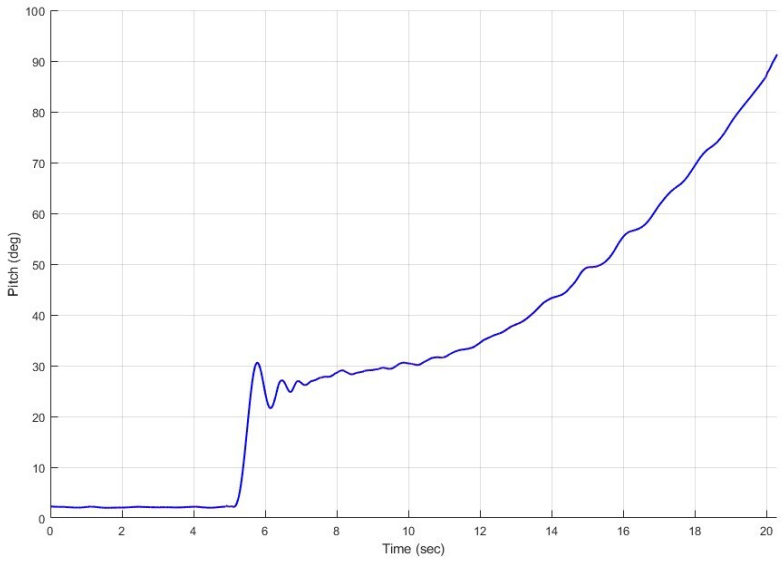

Figure 6.11: Pitch of rocket vs time.

6.2.6 Estimated Drag Coefficient

Using flight data, drag coefficients for the vehicle in flight can be estimated. Air brake drag, however, could not be estimated for this flight, as the air brakes did not deploy.

Figure 6.12 displays the predicted drag coefficient at relevant Mach values compared to the measured drag coefficient in flight without air brake deployment. In flight, this coefficient was approximately 0.46, while it was analyzed to be approximately 0.44. This is very similar and implies confidence in the simulated drag coefficients.

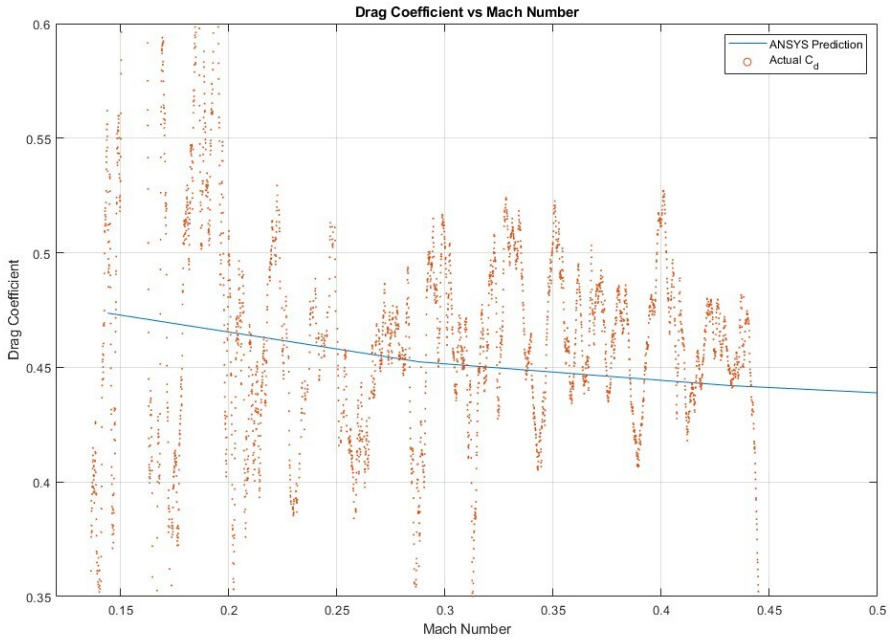

Figure 6.12: Vehicle Drag Coefficient Comparison

In the first VDF attempt, air brakes did deploy. From this flight, the team was able to analyze the drag coefficient of the vehicle with air brakes deployed. Figure 6.13, below, shows these data points compared to the predicted curve. Predicted for this range of Mach was around 0.68, while the median range appears to be around 0.6. This is a 12.5 percent difference. This implies confidence in simulation accuracy and air brake ability.

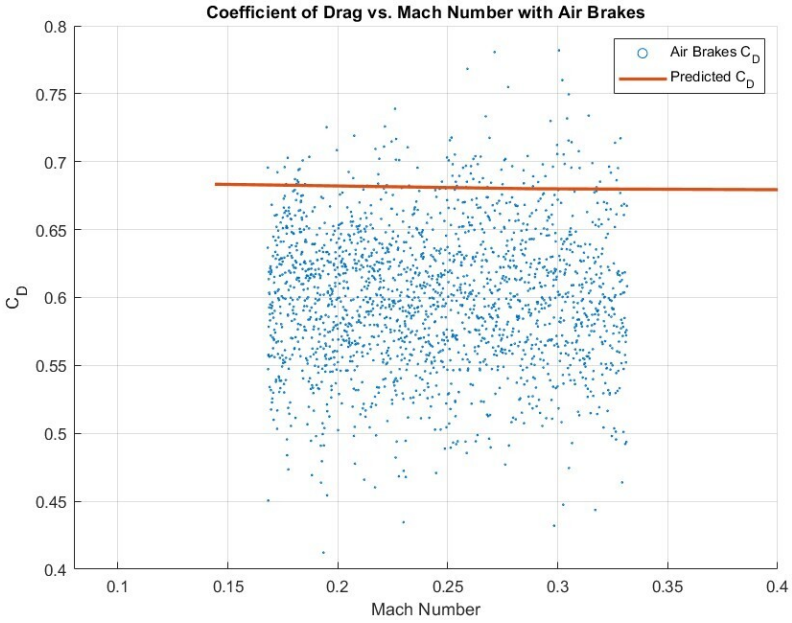

Figure 6.13: Vehicle Drag Coefficient Comparison- Air Brakes Deployed

Post Flight Simulation

In order to try to match actual flight patterns, post flight simulation was performed. The main focus for improving flight simulation for this launch was improving aloft winds predictions. This could be implemented into RocketPy code.

Figure 6.14, below, displays an adjusted flight profile for winds aloft. This mimics the conditions of launch day of up to 20 mph ground winds and up to 30 mph winds aloft. The apogee yielded from this simulation is 3629 feet, which is only 58 feet off of the actual apogee reached. This difference can be explained by the weather cocking of the vehicle. This is not something that can be easily simulated or predicted.

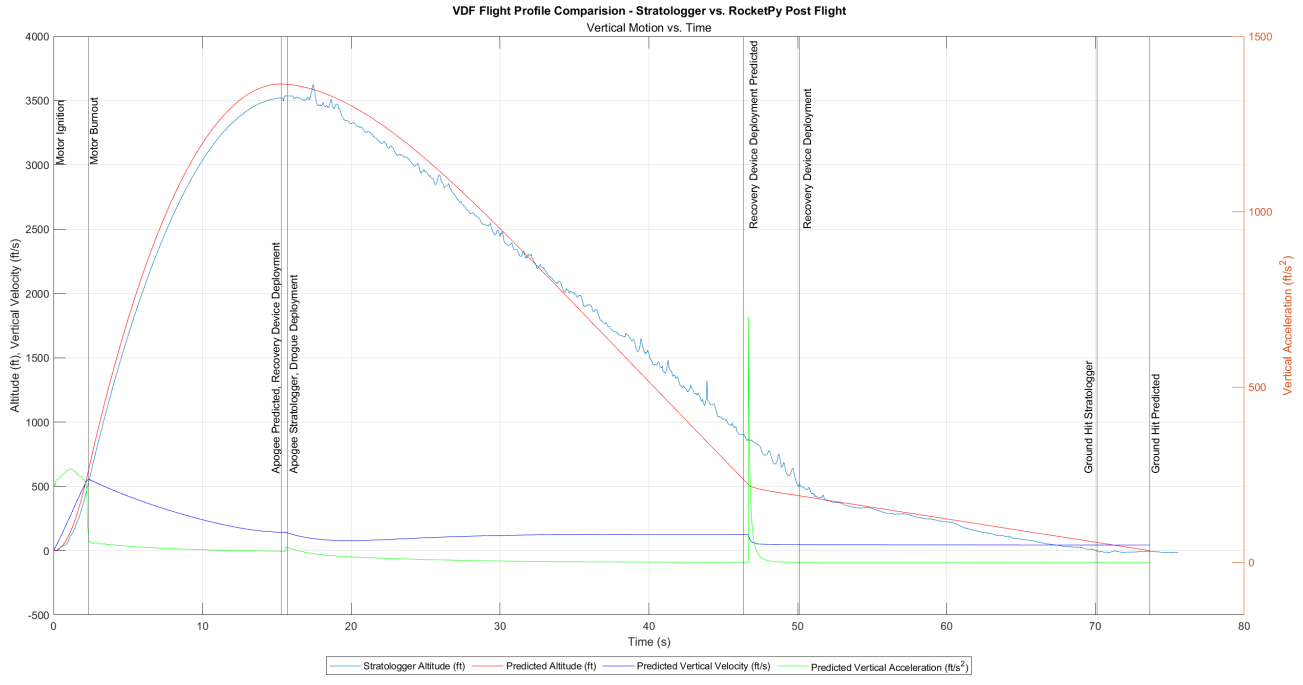

Figure 6.14: Post Flight Simulation Comparison

6.2.7 Subscale Comparison

From the perspective of flight prediction, the Subscale was a more nominal flight. The wind was optimal and the launch rail was stable. The ballast on the Subscale launch vehicle was similar, but weather cocking was a lower concern due to the low winds, leading to a more accurate flight prediction. Overall, the recovery system functioned as intended for both the Subscale and Full-scale vehicles, ensuring a successful mission.

6.2.8 Lessons Learned

During the team's first VDF attempt, there was a critical failure in the recovery system. The drogue parachute deployed at apogee as expected, however when the vehicle reached 550 feet and the main parachute deployed, the aft end of the vehicle completely separated from the Nose Cone and main parachute and continued to fall to the ground under the drogue parachute while the Nose Cone descended under the main parachute.

This complete separation of the vehicle was caused by a fundamental misunderstanding of the functionality of proper use of a parachute deployment bag as opposed to a protective nomex blanket. The forward end of the AVAB was connected to a shock cord which was connected to the parachute deployment bag, and the parachute inside of the parachute deployment bag was connected to the Nose Cone. There was no connection between the main parachute and the parachute deployment bag or shock cord - thus the Nose Cone was not connected to the rest of the vehicle in any way after separation.

In preparation for the team's second VDF attempt, the team expanded dry run to include a manual separation of the vehicle as it would separate for drogue and main parachute deployment. This process ensured that all sections of the launch vehicle were properly tethered together as the team expected them to be during descent.

From the perspective of flight prediction, the importance of in depth wind analysis was emphasized by this flight. On particularly turbulent days, wind can have a significant impact on altitude. Additionally, non-nominal characteristics such as high ballast or an unstable launch rail can negatively impact performance.

6.2.9 Plan of Action

From the perspective of flight prediction, in-depth wind analysis will be completed prior to launch. Winds aloft and their directions will be analyzed based on available weather reports in the area. No additional changes need to be made to the recovery system, as they were completed prior to the official Vehicle Demonstration Flight.

6.3 Payload Demonstration Flight

For the planned PDF flight that took place on March 8th, the STEMCRaFT payload did not meet the mission success criteria and the Air Brakes experimental payload met the full mission success criteria.

6.3.1 Retention System Analysis

The STEMCRaFT remained secured inside the Nose Cone and all hardware remained in place upon landing.

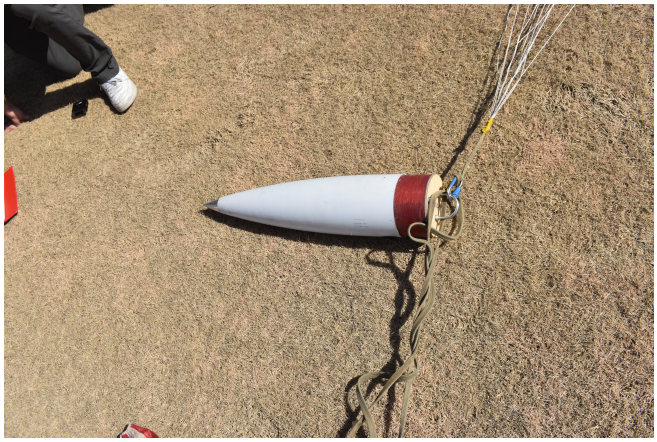

Figure 6.15: STEMCRaFT Retention System During PDF Recovery.

Successful Systems

All retention systems were functioning nominally throughout assembly, launch, and recovery of the launch vehicle.

The structural elements of the payload performed flawlessly, with the electronics securely retained within the STEMCRaFT capsule throughout the entire flight and recovery process. Upon recovery, the payload remained within the Nose Cone, all electronics were still online, and the STEMnauts were safely secured within the STEMCRaFT. Post-flight analysis revealed no structural damage.

System Failures

No failures were observed in the payload retention system throughout the mission. All structural and securing mechanisms functioned as designed, ensuring the STEMCRaFT capsule remained intact and stable within the Nose Cone from launch through recovery. Post-flight analysis confirmed that all mounting points, fasteners, and restraints remained fully engaged, with no signs of significant loosening or damage. The retention system successfully withstood all flight forces experienced.

Lessons Learned

The flight confirmed that the retention system is fully capable of securing the payload under actual flight conditions. Despite exposure to launch forces, aerodynamic pressure, and landing impact, the STEMCRaFT capsule remained firmly secured with no signs of movement or structural compromise. This successful retention verifies the design's ability to handle the expected flight forces and confirms that the chosen materials/infill, fasteners, and mounting methods are sufficient to maintain payloads safety. The post-flight analysis reinforced confidence in the system's durability, as no damage was observable, and no components had sustained any sort of deformation/wear.

Plan of Action

Given the successful performance of the retention system, no design changes are planned. Since no components or errors were found, the individual components will not be replaced, unless further inspection reveals damage, or a component is damaged in the March 29th launch. The team will continue to perform pre-flight inspections to confirm hardware integrity and structural health prior to the March 29th launch, and the competition launch in Huntsville.

6.3.2 Payload Mission Sequence

The STEMCRaFT mission starts with assembly on the field following the checklists as outlined in 7.2.

During final launch pad checks, the WARHEAD is secured within the launch vehicle's Nose Cone, the pull-pin is removed, and the primary flight software is initialized. After detaching from the ground station, the WARHEAD operates autonomously, with all subsystems maintaining function after detachment. During the flight, the payload remains securely retained via the Nose Cone bulkhead. The data collection subsystem continuously logs flight telemetry, while the APRS transmission system remains idle prior to detecting landing.

Upon landing, the WARHEAD autonomously detects touchdown and initiates post-flight operations. The CPU will gather and calculate the remaining data points (landing velocity, crew survivability, orientation, and GPS coordinates). The transmission subsystem then compiles and transmits the desired flight data in an APRS packet. This transmission will broadcast for a length of 10 seconds periodically every 20 seconds within a 5 minutes period of landing. After the transmission is received, the team will begin preparing to recover the launch vehicle and WARHEAD. Once the launch vehicle is reached, a pull-pin will be inserted, the WARHEAD will be brought back to the teams tent, and the flight data/payload integrity will be verified.



Figure 6.16: Post-recovery capsule inspection and data analysis.

Successful Systems

During pre-launch pad assembly, all subsystems were tested and verified to be functioning properly. This included confirming reception of all ground station commands, verifying the ground station's reception of a test APRS broadcast, and ensuring data collection from the data collection subsystem. Additionally, these checks were repeated at the launch pad, outside of the standard checklist. During this final check, all systems were again performing as expected, and the primary flight software was initialized and subsequently detached from the ground station.

Battery capacity was also verified, with no battery-related issues encountered. Upon recovery, battery levels remained well above the manufacturer-defined minimum acceptable levels.

System Failures

The software system failed after detaching from the ground station, and this issue was not discovered until the launch vehicle was recovered. The failure was determined to have been caused by an Input/Output exception triggered by the loss of the serial connection between the WARHEAD's CPU and the data collection subsystem. Further analysis identified the root cause as a damaged USB cable and the software's inability to handle a brief subsystem disconnect.

While on the pad, the extreme wind caused a negative pressure in the Nose Cone which subsequently triggered a premature state change to the motor burn state. The Input/Output error could have also been influenced by the rapid state changes that took place, which can be seen in Figure 6.17 where the FSM went from standby to freefall in less than .01 seconds.

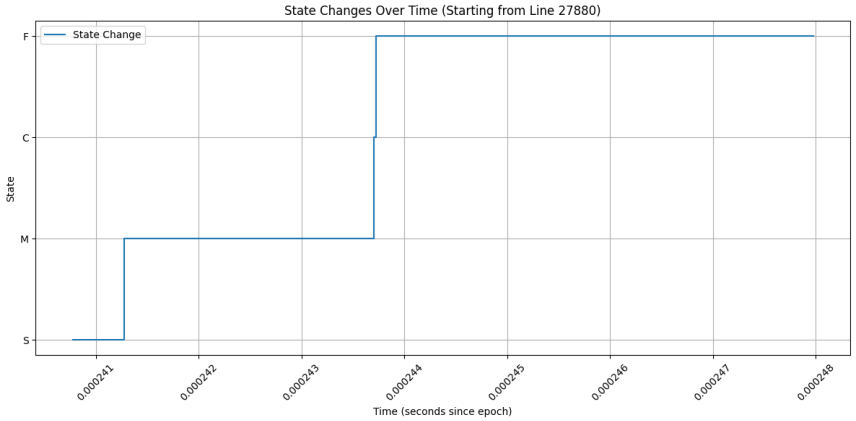

Figure 6.17: State changes over time graph.

Lessons Learned

During the team's PDF flight, a software error resulted in a complete crash of the WARHEAD's software. This error is believed to have been caused by a faulty USB cable connection between the data collection subsystem and the main payload CPU. The faulty cable led to a brief disconnection between the systems, which the software was not equipped to handle, triggering an exception that terminated the flight software. This issue was not immediately noticed, as the software initialized and performed nominally on the launch pad, and during checklist software checks. However, it occurred just before launch, after the team had moved far enough away to no longer actively monitor the system. Additionally, a more robust trigger will be implemented to transition the rocket to motor-burn state, preventing any false positives. Post-flight analysis reliably reproduced the issue. The USB cable connecting the data collection subsystem to the main CPU exhibited intermittent connectivity, cutting out when lightly pressed or moved. After replacing the USB cable, the serial connection became significantly more stable and no longer experienced cutouts.

Since identifying this issue, the software has been made more robust. Given that the USB connection only experienced brief disconnects when interfered with, the software has been updated to handle such events by periodically attempting to reconnect to the data collection subsystem. This ensures that even in the event of a hardware disconnect, the software can re-establish communication and resume the flow of flight data. This issue is not expected to occur in flight and has only been reproduced through deliberate, manual disconnection of the USB cable—an event that should not happen under normal flight conditions.

Plan of Action

With the identified issues addressed, the team has already replaced the faulty cable and implemented more robust exception handling in the software. The payload team will continue stress-testing the software to ensure the WARHEAD can operate nominally even in the presence of unexpected issues. Additionally, the team will verify the health of all hardware components and inspect connectors and wiring for any signs of deterioration or need for replacement.

An additional, optional flight is planned for March 29, during which the launch vehicle will be re-flown. This flight will serve to confirm that no further unexpected software or hardware issues arise and that the WARHEAD can successfully execute the mission objectives outlined in Section 8.40. No design modifications will be made between the submission of this document and the competition flight in Huntsville. All hardware will remain identical to—or direct replacements for—the components used during the team's PDF flight.

7 Safety

7.1 Safety Officer

The Safety Officer position is an elected position within NC State's High-Powered Rocketry Club. For the 2024-2025 year, Megan Rink was elected as the team's Safety Officer. Her responsibilities include verifying and maintaining safety documentation for both the team's lab space and competition activities. Megan ensures that the team is informed about the necessary personal protective equipment (PPE) to use lab tools and materials, which includes drill presses, hand tools, band saws, power tools, flammable items, and hazardous materials.

Additionally, the Safety Officer is responsible for establishing and training the Safety Team. Safety Team members are qualified team members who can assume the Safety Officer's responsibilities in Megan's absence. A Safety Team must be present during the design, construction, assembly, and testing of the launch vehicle, payload, and associated components, as well as during all STEM engagement activities.

Finally, the Safety Officer is responsible for ensuring that the lab equipment and lab space comply with NASA, MAE, and Environmental Health and Safety standards. This includes displaying proper safety information and documentation, maintaining the safe operation of flame and hazardous materials cabinets, managing lab inventory, and keeping the first aid kit appropriately stocked.

7.2 Launch Procedures/ Checklist

A Launch Day Checklist will be followed for every competition launch to ensure safe and proper assembly of the Launch Vehicle and payload. Presented below is the final version of the Launch Day Checklist for this year's competition rocket and payload. On launch day, each step will be checked off and verified by the Team Lead and Safety Officer, along with any additional personnel as specified by the checklist. The Safety Officer must be present to ensure the checklist is followed correctly, preventing any damage to the vehicle, payload, or team members. At the beginning of each checklist, the necessary personnel, required materials, and necessary PPE are listed. Steps involving PPE or energetics are color-coded in yellow and red, respectively, for easy identification.

Pelicanator

Launch Day Checklist



This checklist completed by: _____

On: __ / __ / __

Checklist Legend

PPE Required

Explosives/Energetics - DANGER!

NOTE: Any completion blocks with a personnel title require that individual either to stamp or their initials to be placed in the completion block.

NOTE: First 3 checklists are night before checklists. Then the count starts again at AV Bay Assembly checklist for launch day checklists.

1. E-MATCH INSTALLATION

Required Personnel		Confirmation
Student Team Lead	Katelyn Yount	
Safety Officer	Megan Rink	
Recovery Lead	Trent Couse	
E-Match Personnel 1		
E-Match Personnel 2		

Required Materials			
Item	**Quantity**	**Location**	**Completion**
Firewire Electric-Match (e-match)	4	Avionics Box	
Wire Snippers	1	LD Toolbox Middle Drawer	
Forward AVAB Bulkhead	1	Energetics Box	
Aft AVAB Bulkhead	1	Energetics Box	
Wire Strippers	1	LD Toolbox Middle Drawer	
Needle Nose Pliers	1	LD Toolbox Middle Drawer	
Terminal Block Screwdriver	1	LD Toolbox Top Drawer	
Blue Tape	1	LD Toolbox Top Drawer	

Note: This checklist is to be executed on both AVAB bulkheads simultaneously

Number	Task	Completion
1.1	Take 4 **e-matches** and cut them to approximately 3 inches from the **e-match** head using **wire snippers**.	
1.2	Remove the red plastic protective **e-match** cover from the **e-match** head by sliding it down the **e-match** wire.	
1.3	Separate the two **e-match** wires with **wire snippers** for all 4 **e-matches** on the **Forward and Aft AVAB Bulkheads**.	
1.4	Using **wire strippers**, remove ¾ inch of insulation from both wires at the ends of all 4 **e-match** wires.	
1.5	Bend the exposed wire into a small loop using **needle nose pliers**.	
1.6	Loosen the screws in unoccupied terminal blocks on the outside of the **Aft AVAB bulkhead** and the **Forward AVAB Bulkhead** using a **terminal block screwdriver**.	
1.7	Place the Main Primary **e-match** wires into the Main Primary terminal block.	
1.8	Place the Main Secondary **e-match** wires into the Main Secondary terminal block.	
1.9	Place the Drogue Primary **e-match** wires into the Drogue Secondary terminal block.	
1.10	Place the Drogue Secondary **e-match** wires into the Drogue Secondary terminal block.	
1.11	Tighten the screws in all terminal blocks on the **Aft AVAB Bulkhead** and the **Forward AVAB Bulkhead.**	
1.12	Verify **e-match** security by visual inspection and applying a strong tensile force to the wires coming out of the terminal blocks on the **Aft AVAB Bulkhead** and the **Forward AVAB Bulkhead.**	**Safety Officer confirmation:**
1.13	Confirm that the metal screw on the inside of the terminal block is in contact with the stripped part of the **e-match** wire, not the protective coating. This ensures **e-match** continuity.	**Recovery Lead confirmation:**
1.14	Confirm that the metal screw on the inside of the main primary terminal block is in contact with the stripped part of the white main primary altimeter wires and the metal screw on the inside of the main secondary terminal block is in contact with the stripped part of the blue main secondary altimeter wires. This ensures **e-match** continuity. Confirm that these wires are folded in a small loop inside the terminal block to increase contact area.	**Recovery Lead confirmation:**
1.15	Confirm that the metal screw on the inside of the drogue primary terminal block is in contact with the stripped part of the yellow drogue primary altimeter wires and the metal screw on the inside of the drogue secondary terminal block is in contact with the stripped part of the red drogue secondary altimeter wires. This ensures **e-match** continuity. Confirm that these wires are folded in a small loop inside the terminal block to increase contact area.	**Recovery Lead confirmation:**
1.16	Bend the Main Primary **e-match** head such that it is perpendicular to the wire.	
1.17	Place the Main Primary **e-match** head into the Main Primary blast cap such that the **e-match** head lays flat against the bottom of the blast cap.	
1.18	Bend the Main Primary **e-match** head such that it is flush with the inner and outer surfaces of the Main Primary blast cap.	

1.19	Bend the Main Secondary **e-match** head such that it is perpendicular to the wire.	
1.20	Place the Main Secondary **e-match** head into the Main Secondary blast cap such that the **e-match** head lays flat against the bottom of the blast cap.	
1.21	Bend the Main Secondary **e-match** head such that it is flush with the inner and outer surfaces of the Main Secondary blast cap.	
1.22	Bend the Drogue Primary **e-match** head such that it is perpendicular to the wire.	
1.23	Place the Drogue Primary **e-match** head into the Drogue Primary blast cap such that the **e-match** head lays flat against the bottom of the blast cap.	
1.24	Bend the Drogue Primary **e-match** head such that it is flush with the inner and outer surfaces of the Drogue Primary blast cap.	
1.25	Bend the Drogue Secondary **e-match** head such that it is perpendicular to the wire.	
1.26	Place the Drogue Secondary **e-match** head into the Drogue Secondary blast cap such that the **e-match** head lays flat against the bottom of the blast cap.	
1.27	Bend the Drogue Secondary **e-match** head such that it is flush with the inner and outer surfaces of the Drogue Secondary blast cap.	
1.28	Secure the **e-match** wires on the outsides of the blast cap walls with **blue tape**.	
1.29	Confirm that the labels on the **Forward and Aft AVAB Bulkheads** are still visible for correct black powder assembly.	**Safety Officer confirmation:**

2. MAIN BLACK POWDER

Required Personnel		**Confirmation**
Student Team Lead	Katelyn Yount	
Safety Officer	Megan Rink	
Recovery Lead	Trent Couse	
Main Black Powder Personnel 1		
Main Black Powder Personnel 2		

Required Materials			
Item	**Quantity**	**Location**	**Completion**
Safety Glasses	4	Safety Box	
Nitrile Gloves	4	Safety Box	
Resealable container	2	Flame Cabinet	
Paper Towel	1	Energetics Box	
Small Scale	1	LD Toolbox Top Compartment	
Spoon	1	Energetics Box	
Main Primary Charge (3.1 grams)	1	Energetics Box	
Funnel	1	LD Toolbox Top Compartment	
Forward AVAB Bulkhead	1	Energetics Box	
Biodegradable insulation	1	-	
Blue Tape	1	LD Toolbox Top Drawer	
Main Secondary Charge (3.8 grams)	1	Energetics Box	
White Copy Paper	2	HPRC Lab	
Plumbers Putty	1	LD Toolbox Top Compartment	
Electrical Tape	1	LD Toolbox Top Drawer	
Anti Static Bag	2	Energetics Box	
Flameproof Explosive Containment Box	1	-	

Number	Task	Completion
2.1	Confirm all participating members are wearing **safety glasses** and **nitrile gloves**.	**Safety Officer confirmation:**
2.2	Place 1 small **resealable container** on the scale, on top of a piece of **paper towel**, such that the reading on the **scale** can still be read.	
2.3	Zero the **scale**.	
2.4	Using a **spoon**, carefully measure out 3.1 grams of black powder into the **resealable container** for the Main Primary charge.	
2.5	Reseal the container and label it MP.	
2.6	Repeat steps 2.2-2.5 for 3.8 grams of black powder for the Main Secondary charge, except label it MS.	
2.7	Using a **funnel** placed at the bottom of the Main Primary blast cap, carefully pour the Main Primary black powder charge into the blast cap over the e-match head.	
2.8	Slowly lift the **funnel** while tapping it so that all of the black powder falls into the Main Primary blast cap.	
2.9	While holding the e-match wire, slowly lift the e-match head in the blast cap until it can be seen at the top of the Main Primary black powder.	
2.10	Fill the remaining space in the Main Primary blast cap with **biodegradable insulation**, but do not pack it in.	
2.11	Seal the Main Primary blast cap with 2 inch strips of **blue tape**. If using more than one piece of **blue tape**, do not have any overlaps greater than 5mm.	
2.12	Wrap a 4 inch strip of **blue tape** around the outside edge of the blast cap to ensure the top layers stay in place. Fold the excess tape over the top to be flush with the blast cap if necessary.	
2.13	Confirm all edges of the Main Primary blast cap are sealed with **blue tape**.	**Safety Officer confirmation:**
2.14	Repeat steps 2.7-2.12 for the Main Secondary blast cap	
2.15	Confirm that all edges of the main Secondary blast cap are sealed with **blue tape**.	**Safety Officer confirmation:**
2.16	Place a sheet of **white copy paper** on the assembly table and turn over the **Forward AVAB Bulkhead** on top of the paper.	
2.17	Inspect the sheet of paper and confirm that no black powder has leaked from the **Forward AVAB Bulkhead**.	**Safety Officer confirmation:**
2.18	If black powder leaked from either cap of the **Forward AVAB Bulkhead**, pour the black powder from that cap back into the **black powder container** and repeat checklist items 2.7-2.12 for the blast cap that leaked. Then repeat checklist items 2.16-2.17	
2.19	Seal any holes in the bulkhead with **plumbers putty**.	
2.20	Tape over the ends of both of the **e-matches** with **electrical tape** to prevent any premature ignition.	
2.21	Place **Forward AVAB bulkhead** in an **anti-static bag** and place the entire assembly in the flame cabinet or flameproof explosive containment box.	

3. DROGUE BLACK POWDER

Required Personnel		Confirmation
Student Team Lead	Katelyn Yount	
Safety Officer	Megan Rink	
Recovery Lead	Trent Couse	
Drogue Black Powder Personnel 1		
Drogue Black Powder Personnel 2		

Required Materials			
Item	**Quantity**	**Location**	**Completion**
Safety Glasses	4	Safety Box	
Nitrile Gloves	4	Safety Box	
Resealable container	2	Flame Cabinet	
Small Scale	1	LD Toolbox Top Compartment	
Paper Towel	1	Energetics Box	
Spoon	1	Energetics Box	
Drogue Primary Charge (2.8 grams)	1	Energetics Box	
Funnel	1	LD Toolbox Top Compartment	
Aft AVAB Bulkhead	1	Energetics Box	
Biodegradable insulation	1	-	
Blue Tape	1	LD Toolbox Top Drawer	
Drogue Secondary Charge (3.5 grams)	1	Energetics Box	
While Copy Paper	2	LD Toolbox Top Compartment	
Plumbers Putty	1	LD Toolbox Top Compartment	
Electrical Tape	1	LD Toolbox Top Drawer	
Anti Static Bag	2	Energetics Box	
Flameproof Explosive Containment Box	1	-	

Number	Task	Completion
3.1	Confirm all participating members are wearing **safety glasses** and **nitrile gloves.**	**Safety Officer confirmation:**
3.2	Place 1 small **resealable container** on the **scale**, on top of a piece of **paper towel,** such that the reading on the **scale** can still be read.	
3.3	Zero the **scale**.	
3.4	Using a **spoon**, carefully measure out 2.8 grams of black powder into the **resealable container** for the drogue primary charge.	
3.5	Reseal the container and label it DP.	
3.6	Repeat steps 2.2-2.5 for 3.5 grams of black powder for the drogue secondary charge, except label it DS.	
3.7	Using a **funnel** placed at the bottom of the Drogue Primary blast cap, carefully pour the Drogue Primary black powder charge into the blast cap over the e-match head.	
3.8	Slowly lift the **funnel** while tapping it so that all of the black powder falls into the Drogue Primary blast cap.	
3.9	While holding the e-match wire, slowly lift the e-match head in the blast cap until it can be seen at the top of the Drogue Primary black powder.	
3.10	Fill the remaining space in the Drogue Primary blast cap with **biodegradable insulation**, but do not pack it in.	
3.11	Seal the Drogue Primary blast cap with 2 inch strips of **blue tape**. If using more than one piece of **blue tape**, do not have any overlaps greater than 5mm.	
3.12	Wrap a 4 inch strip of **blue tape** around the outside edge of the blast cap to ensure the top layers stay in place. Fold the excess tape over the top to be flush with the blast cap if necessary.	
3.13	Confirm all edges of the Drogue Primary blast cap are sealed with **blue tape.**	**Safety Officer confirmation:**
3.14	Repeat steps 2.7-2.12 for the Drogue Secondary blast cap.	
3.15	Confirm that all edges of the Drogue Secondary blast cap are sealed with **blue tape.**	**Safety Officer confirmation:**
3.16	Place a sheet of **white copy paper** on the assembly table and turn over the **Aft AVAB Bulkhead** on top of the paper.	
3.17	Inspect the sheet of paper and confirm that no black powder has leaked from the **Aft AVAB Bulkhead**.	**Safety Officer confirmation:**

3.18	If black powder leaked from either cap of the **Aft AVAB Bulkhead**, pour the black powder from that cap back into the **black powder container** and repeat checklist items 2.7-2.12 for the blast cap that leaked. Then repeat checklist items 2.16-2.17	
3.19	Seal any holes in the bulkhead with **plumbers putty**.	
3.20	Tape over the ends of both of the **e-matches** with **electrical tape** to prevent any premature ignition.	
3.21	Place **Aft AVAB Bulkhead** in an **anti-static bag** and place the entire assembly in the flame cabinet or flameproof explosive containment box.	

END OF NIGHT BEFORE CHECKLIST

1. AVAB BAY ASSEMBLY

Required Personnel		**Confirmation**
Student Team Lead	Katelyn Yount	
Safety Officer	Megan Rink	
Recovery Lead	Trent Couse	
Air Brakes Lead	Samuel Patterson	
AVAB Bay Personnel 1		
AVAB Bay Personnel 2		
AVAB Bay Personnel 3		

Required Materials			
Item	**Quantity**	**Location**	**Completion**
Safety Glasses	5	Safety Box	
Assembled AVAB Sled	1	AVAB Box	
AVAB Switch Band / Coupler Section	1	-	
Blue Tape	1	LD Toolbox Top Drawer	
Multimeter	1	LD Toolbox Top Compartment	
4s 2200 mAh Air Brakes Battery	1	Battery Bag	
Stratologger Battery	1	Battery Bag	
Easy Mini Battery	1	Battery Bag	
Eggfinder Mini Battery	1	Battery Bag	
Eggfinder LCD 1000 mAh Battery	1	Battery Bag	
Electrical Tape	1	LD Toolbox Top Drawer	
Adjustable Wrenches	1	LD Toolbox Middle Drawer	
AVAB Retention Screws	4	Vehicle Box	
Recovery Pull Pin	1	Avionics Box	
Air Brakes Pull Pin	1	Air Brakes Box	
Aft AVAB Bulkhead	1	Energetics Box	
¼" Hex Nuts	16	Vehicle Box	
¼" Washers	8	Vehicle Box	
Forward AVAB Bulkhead	1	Energetics Box	
Plumbers Putty	1	LD Toolbox Top Compartment	

Small Screwdriver	1	LD Toolbox Top Drawer	
EggFinder Receiver	1	Student Backpack	
Laptop	1	Student Backpack	
Rubber Bands	4	LD Toolbox Bottom Drawer	
Phone	1	-	
Scissors	1	LD Toolbox Top Drawer	

Number	Task	Completion
1.1	Confirm the correct assembly of the **AVAB sled**. From forward to aft: 4 nuts, AV Altimeter sled, 4 spacers, AV battery sled, Air Brakes mechanism, servo sled, 4 spacers, flight computer sled, 4 spacers, IMU/battery sled, 4 nuts.	**Recovery Lead confirmation:** **Air Brakes Lead confirmation:**
1.2	Confirm the spacing of the sled is aligned with the Air Brakes slots in the AVAB switch band by lining up the **AVAB sled** and **AVAB coupler/airframe** side by side.	**Air Brakes Lead confirmation:**
1.3	Use a **multimeter** to test the voltage of the **Air Brakes battery**.	**Voltage:**
1.4	If the **Air Brakes battery** measures below 16.7 volts, replace with a fresh 4s 2200 mAh LiPo battery and repeat checklist item 1.3.	
1.5	Use hook and loop fasteners to secure the **2200mAh Air Brakes battery** to the IMU/battery sled, using the arrow marked orientation.	
1.6	Connect the **Air Brakes Battery** to its battery connector.	
1.7	Temporarily insert the **Air Brakes pull pin** into the pull pin switch to conserve battery life.	
	Avionics Sled	
1.8	Confirm that the **avionics pull pin** is in its pull pin switch	
1.9	Use a **multimeter** to test the voltage of the **Stratologger 9V battery.**	**Voltage:**
1.10	If the **9V battery** measures below 9.0 volts, replace it with a fresh battery, and repeat checklist item 1.9.	
1.11	Connect the **Stratologger battery** to its battery clip	
1.12	Friction fit the **Stratologger battery** in the Stratologger battery compartment with blue tape.	
1.13	Use a **multimeter** to test the voltage of the **Easy Mini lipo battery.**	**Voltage:**
1.14	If the **Easy Mini battery** measures below 8.0 volts, replace it with a fresh battery and repeat checklist item 1.13.	
1.15	Place the **Easy Mini battery** in its battery compartment, aligning the velcro.	
1.16	Connect the **Easy Mini battery** to its battery connector.	
1.17	Use a **multimeter** to test the voltage of the **Eggfinder mini lipo battery.**	**Voltage:**
1.18	If the **Eggfinder mini battery** measures below 8.0 volts, replace with a fresh battery, and repeat checklist item 1.17.	
1.19	Place the **Eggfinder mini battery** in the Eggfinder battery compartment, aligning the velcro.	
1.20	Connect the **Eggfinder mini battery** to its battery connector. The eggfinder mini LED should start blinking red	
1.21	Half remove the **avionics pull pin** and the easy mini altimeter should start beeping. Fully remove the **avionics pull pin** and the stratologger altimeter should start beeping.	
1.22	Secure the **Eggfinder and Stratologger batteries** by placing a single piece of **electrical tape** over them.	
1.23	Secure the **Easy Mini battery** by placing a single piece of **electrical tape** over it, width-wise.	
1.24	Confirm the green wires connected to the pull pin switch are connected to the switch terminal on the green Easy Mini altimeter.	**Recovery Lead confirmation:**
1.25	Confirm the red wires connected to the pull pin switch are connected to the switch terminal on the red Stratologger altimeter.	**Recovery Lead confirmation**:
1.26	Confirm the drogue primary wires are yellow and drogue secondary wires are red on the altimeters. Note: stratologger is the primary altimeter.	**Recovery Lead confirmation**:
1.27	Confirm that main primary wires are white and main secondary wires are blue on the altimeters. Note: stratologger is the primary altimeter.	**Recovery Lead confirmation**:

1.28	Apply a light tensile force to all wires coming out of the altimeters to verify security. Visually confirm that all wires are connected.	**Safety Officer confirmation:**
1.29	Hand tighten the nuts on the forward and aft ends of the **AVAB sled assembly.**	
1.30	Confirm all members within the assembly tent are wearing **safety glasses.**	**Safety Officer confirmation:**
1.31	Remove **Aft AVAB Bulkhead** from its anti-static bag.	
1.32	Confirm the drogue primary wires are yellow and drogue secondary wires are red on the **Aft AVAB Bulkhead.**	
1.33	Apply a tensile force on the wires coming out of the Drogue Primary and Drogue Secondary terminal blocks to verify security. Visually confirm that wires are connected.	**Safety Officer confirmation**:
1.34	Connect the **Aft AVAB Bulkhead** to the aft end of the **AVAB Bay** and ensure that wires are not pinched. Align the bulkhead such that the charge wells are over the batteries so that it fits with the spacing.	
1.35	Very loosely secure **Aft AVAB Bulkhead** to the **AVAB** using four **¼ inch washers** and four **¼ inch hex nuts**, one for each threaded rod.	
1.36	Thread the red and yellow altimeter wires through the air brakes wire slots.	
1.37	Align the forward end of the **AVAB Sled** with the aft end of the **AVAB bay** such that the pull pin switch is aligned with the pull pin switch hole on the switch band.	
1.38	Apply a layer of **electrical tape** around the edge of the forward end of the Air Brakes mechanism/battery sled to better seal the altimeter from pressure changes due to Air Brake deployment	
1.39	Remove the avionics and air brakes **pull pins**.	
1.40	Insert the **AVAB Sled** into the **AVAB bay.**	
1.41	Align the air brakes fins with the air brakes fin slots	
1.42	Insert the **recovery pull pin** into the recovery pull pin switch through the AVAB switch band.	
1.43	Insert the **air brakes pull pin** into the air brakes pull pin switch through the aft AVAB coupler.	
1.44	Insert the four **AVAB retention screws** into the retention screw holes. Tighten with a **screwdriver**.	
1.45	Fully secure **Aft AVAB Bulkhead** to the **AVAB.**	

1.46	While pointing aft blast caps away from personnel connect the red JST connectors, yellow JST connectors. Push these connections down and out of the way of the bulkhead.	
1.47	Remove **Forward AVAB bulkhead** from its anti-static bag.	
1.48	Confirm that main primary wires are white and main secondary wires are blue on the **Forward AVAB bulkhead.**	
1.49	Apply a tensile force on the wires coming out of the Main Primary and Main Secondary terminal blocks to verify security. Visually confirm that wires are connected.	**Safety Officer confirmation**:
1.50	While pointing forward blast caps away from personnel connect the white JST connectors and blue JST connectors.	
1.51	Confirm that the JST connections are secure by applying a light tensile force on all 4 JSP\T connectors.	**Recovery Lead confirmation**:
1.52	Connect the **Forward AVAB bulkhead** to the forward end of the **AVAB Bay** and ensure that wires are not pinched. There is no orientation for this connection.	
1.53	Secure **Forward AVAB Bulkhead** to the **AVAB** using four **¼ inch washers** and four **¼ inch hex nuts**, one for each threaded rod.	
1.54	Use **adjustable wrenches** to tighten the nuts on the **Forward and Aft AVAB bulkheads.**	
1.55	Confirm that **plumbers putty seals** both e-match holes on the **Forward and Aft AVAB Bulkheads.**	**Recovery Lead confirmation**:
1.56	Using a **small screwdriver**, confirm that the pressure ports on the forward end of the AVAB are clear.	**Safety Officer confirmation:**
1.57	Use a **multimeter** to test the voltage of the **Eggfinder Receiver battery**.	**Voltage:**
1.58	If the **Eggfinder Receiver battery** measures below 6.0 volts, replace with a fresh 1000 mAh battery and repeat checklist item 1.57.	
1.59	Turn on the **EggFinder LCD Receiver** by plugging in the battery and connect to the GPS. It should beep twice and display coordinates. If the receiver does not beep at all, it is not connected to the eggfinder mini. If it is continuously beeping twice, the **EggFinder LCD receive**r is connected to the eggfinder mini but the eggfinder mini does not have a satellite connection.	

1.60	Confirm that the measured coordinates via the **Eggfinder Receiver** match coordinates measured by a team members phone.	**Recovery Lead confirmation**:
Only if an Air Brakes Lead is Available to do the following:		
1.61	Remove the **air brakes pull pin**.	
1.62	Verify air brakes aren't rubbing/catching on anything and ensure the encoder is working. run: `uv run scripts/run_servo_and_encoder.py`	
1.63	Verify the program works, check invalid fields, fetched packets, and pitch. run: `uv run real -v`	
1.64	Insert the **Air Brakes pull pin** through the labeled hole in the AVAB body tube and coupler.	
Recovery Procedure		
1.65	Place the entire AVAB on a **scale** and record the weight to update simulations.	Weight:
1.66	Confirm a club member with **safety glasses** and **fireproof gloves** holds the assembled AV bay in the shade at least 6 feet from other members until further use.	**Safety Officer confirmation:**

2. PAYLOAD ASSEMBLY

Required Personnel		**Confirmation**
Student Team Lead	Katelyn Yount	
Safety Officer	Megan Rink	
Payload Lead	Connor Swanson, Ryan Keever, Samuel Patterson	
Payload Personnel 1		
Payload Personnel 2		

Required Materials			
Item	**Quantity**	**Location**	**Completion**
Payload Sled	1	Payload Box	
Camera	1	Payload Box	
Windows Laptop	1	Student Backpack	
2M Handheld Radio	1	Payload Box	
2 Cell 2200 mAh Lipo Battery	1	Payload Box	
4 Cell 2200 mAh Lipo Battery	1	Payload Box	
Payload Shell	1	Payload Box	
Top Payload Bulkhead	1	Payload Box	
Bottom Payload Bulkhead	1	Payload Box	
Nose Cone	1	-	
Nose Cone Bulkhead	1	Nose Cone	
¼" Hex Nuts	2	Payload Box	
¼" Washers	2	Payload Box	
#6 Low-profile Screws	6	Payload Box	
#2 Tiny Allen Wrench	1	Payload Box	
Multimeter	1	LD Toolbox Top Compartment	
Pull Pin	1	Avionics Box	
STEMnauts	4	STEMCRaFT	
Adjustable Wrench	2	LD Toolbox Middle Drawer	

Number	**Task**	**Completion**
2.1	Check the tightness of the ballast and nose cone tip.	

2.2	Confirm correct assembly of **payload sled**: The front side will contain the XBee in the top left, the Raspberry Pi in the top right, and the PCB at the bottom. The back side will contain the transmitter in the top left, the **Raspberry Pi battery** in the top right, the **pull pin switch** under the **Raspberry Pi battery**, and the **transmitter battery** at the bottom.	**Payload Lead confirmation:**
2.3	Ensure the **pull pin** is inserted into the pull pin switch.	
2.4	Locate the **4 cell 2200mAh LiPo battery** labeled “WARHEAD” from within the payload box Using a **multimeter**, verify the charge of **LiPo battery** is greater than or equal to 16.7V.	**Note Voltage:**
2.5	If the **LiPo battery** charge is below 16.7V, replace it with a new battery that measures above 16.7V. If there is no battery with a charge above 16.7V, use the battery with the highest voltage reading.	
2.6	Insert the selected **4 cell LiPo battery** into the Raspberry Pi battery slot that is located towards the antenna end of the **STEMCRaFT**. Secure the battery using the two velcro straps installed on the sled.	
2.7	Locate the FUSE module on the Raspberry Pi side of the STEMCRaFT. Ensure that the two, 3-pin JST connectors on the FUSE are connected to the two, 3-pin JST connectors stemming from the wire routing bundle. The connected pairs are labeled with matching “PI” and “TX” labels, and should be matched to the connector with the matching label.	
2.8	Locate the Data Collection PCB module on the Raspberry Pi side of the **STEMCRaFT**. Connect the USB cable between the micro USB port on the ESP32 and the USB port on the Raspberry Pi.	
2.9	Locate the XBee module on the Raspberry Pi side of the **STEMCRaFT.** Ensure that the two 3-pin JST connectors labeled “XBEE” are connected and have clicked in place.	
2.10	**Electrical tape** over the exposed pads of the 20624 camera cable to ensure nothing gets shorted during assembly.	
2.11	Connect the **Raspberry Pi LiPo** to the XT60 connector labeled “PI” to power the Raspberry Pi.	

2.12	Remove the pull pin and verify sensors light up. Wait for the second light(fix status) on the GPS module to begin flashing to ensure hot start during launch. The following sensors should also be lit at this point: • DPS310 • BNO085 • ESP32S (static red light & flashing blue) • SAM-M10Q (static red & flashing yellow) • XBee Pro S3B	**Payload Lead confirmation:**
2.13	Power on the **2M handheld radio** and tune to the 144.390MHz frequency. This will be used to monitor for any transmissions prior to landing. Ensure the **handheld radio’s** volume is on.	
2.14	With the Raspberry Pi powered, use a **Windows laptop** with the Visual Studio Code software installed to create a mobile hotspot with the following configuration: Name: HPRC_WARHEAD Password: tacholycos Band: 2.4GHz	
2.15	Wait for the **STEMCRaFT** Raspberry Pi to connect to the mobile hotspot. This will connect under the name “warhead”. Note the IP Address listed next to “warhead” In the case of the Raspberry Pi not connecting to the hotspot within 1-minute, power cycle the **STEMCRaFT** by inserting the **pull-pin** fully and waiting for 10 seconds before removing the **pull-pin**.	**IP Address:**
2.16	After connecting to the **STEMCRaFT** via the mobile hotspot, perform the following command within the terminal visual studio code. 1. CTRL + SHIFT + P 2. Select “Remote-SSH: Connect to Host..” 3. If the IP Address of the STEMCRaFT is shown within the next selection, select it and proceed to step 6, otherwise proceed to step 4. 4. Select “Add New SSH Host...” 5. Enter “ssh pi@IP_ADDRESS”, where IP_ADDRESS is the IP Address associated with the STEMCRaFT. 6. Select “Linux” as the operating system if prompted. 7. Enter “raspberry” when prompted for a password	
2.17	Once connected to the Raspberry Pi via ssh, Open the terminal with	

	“Ctrl + ` “ and navigate to the Payload folder via the following command: “cd Payload-2024-2025”	
2.18	From the “Payload-2024-2025” folder, enter the following command: “uv run scripts/gpio_toggle.py”	
2.19	Using the instructions displayed in the remote terminal, ensure that the PTT GPIO is functioning nominally via the debug controls. When GPIO functionality is validated, exit the program via the displayed controls.	
2.20	Locate the **2 cell 2200mAh LiPo battery** labeled “SWITCH” from within the payload box Using a **multimeter**, verify the charge of **LiPo battery** is greater than or equal to 8.4V.	**Note voltage:**
2.21	If the **LiPo battery** charge is below 8.4V, replace it with a new battery that measures above 8.4V. If there is no battery with a charge above 8.4V, use the battery with the highest voltage reading.	
2.22	Insert the selected **2 cell LiPo battery** into the transmission battery slot that is located on the bottom of the sled below the pull pin switches. Secure the battery using the two velcro straps installed on the sled.	
2.23	Using a **multimeter**, measure the voltage level of the SA858 transmitter by touching the probes to the positive and negative terminals on the transmitter. The reading should read as a voltage >= 7.8V.	**Note voltage:**
2.24	Prior to assembling the STEMCRaFT capsule, inspect the connections of all of the wires and verify all electronics and wires are secured by at least two methods.	
2.25	Remove the two M3 screws attached to the acrylic window on the STEMnaut housing located on the **bottom bulkhead.**	
2.26	Insert **4 STEMnauts** into the housing and reattach the acrylic window using two M3 screws.	
2.27	Remove all **mounting screws** from the side of the sled if any are present.	
2.28	Remove the **top bulkhead** from the **sled**. The sled should be sitting on the **bottom bulkhead.**	

2.29	Slide the **capsule shell** onto the **sled** and **bottom bulkhead** making sure no wires get caught or pinched. Align the camera ribbon cable hole on the capsule with the pi side of the sled.	
2.30	Temporarily insert the **payload pull pin** to ensure nothing gets shorted during assembly.	
2.31	Feed the camera ribbon cable connector through the **STEMCRaFT** shell.	
2.32	Connect the two JST connectors labeled “FAN”.	
2.33	Mount the **top bulkhead** to the **sled** and **capsule shell**. Feed the XBee antenna through the XBee antenna hole in the top bulkhead. Ensure antenna is straight.	
2.34	Install 6 **#6 low-profile screws** to the side of the **STEMCRaFT** shell using the **tiny allen wrench**.	
2.35	Ensure that the **camera** is inserted into the housing that is mounted on the outside of the nose cone.	
2.36	Ensure that the nose cone ribbon cable is connected to two extension boards such that the pins on the nose cone ribbon cable are oriented correctly.	
2.37	Remove the electrical tape and connect the camera ribbon cable from the **Nose Cone** to the ribbon cable connector on the side of the **STEMCRaFT**.	
2.38	Insert the **STEMCRaFT** fully into the **Nose Cone** along the threaded rods and ensure correct orientation with the pull-pin and camera holes.	
2.39	Remove the **Payload pull pin**.	
2.40	Insert **pull-pin** fully into the switches in order to power down the **STEMCRaFT**.	
2.41	Attach the **removable bulkhead** to the **Nose Cone** and secure it using two ¼” washers and hex nuts.	**Payload Lead confirmation:**
2.42	Place the entire Nose Cone on a scale and record the weight to update simulations.	**Weight:**

3. FIN CAN ASSEMBLY

Required Personnel		Confirmation
Student Team Lead	Katelyn Yount	
Safety Officer	Megan Rink	
Structures Lead	James Holley	
Fin Can Personnel 1		
Fin Can Personnel 2		

Required Materials			
Item	**Quantity**	**Location**	**Completion**
Rail Button	2	Vehicle Box	
5/32 hex key	1	Vehicle Box	
¼" Rail Button Screw	2	Vehicle Box	
Wooden Rail Button Backer Strip	1	Vehicle Box	
Assembled RFMS	1	Fin Can	
Fin Can	1	-	
The Good Screwdriver	2	LD Toolbox Middle Drawer	
#8-32 ½" Screw	7	Vehicle Box	
#8 Washer	7	Vehicle Box	

Number	Task	Completion
3.1	Check the tightness of the forward **rail and aft button screw** but do not overtighten this screw such that the **rail button** is crushed. Check alignment of the **rail button** to ensure it is parallel to the airframe. The inside of the airframe should have a wooden rail button backer strip, ¼" washer, and a ¼" hex nut	**Structures Lead confirmation:**
3.2	Confirm the correct assembly of the **RMFS** including the forward centering ring, fin mounting runners, aft centering ring, and thrust plate.	**Structures Lead confirmation:**
3.3	Confirm that all of the machine screws connecting the **RMFS** and fins on the thrust plate are secure.	
3.4	Slide the **RMFS** fully into the aft end of the **fin can**, lining up the fin slots. Ensure the rail button hole on the RMFS is aligned with the rail button hole on the fin can.	
3.5	Install the aft **rail button** into the bottom rail button hole aligned with the forward rail button with a **¼ in. rail button machine screw**. Hand tighten while ensuring the rail button stays aligned with the airframe.	
3.6	Visually confirm that the remaining threaded L-bracket holes are aligned with the airframe holes.	
3.7	Using 7 **#8 washers**, insert 7 **#8-32 ½ in. screws** into the **RMFS** L-brackets through the airframe holes. There should be 4 forward holes and 3 aft holes. Hand tighten.	
3.8	Confirm all screws are hand tight. Do not overtighten the screws to ensure that the threads on the L-brackets are not stripped.	**Structures Lead confirmation:**
3.9	Apply a tensile force downwards and outwards to each **fin** to confirm security.	**Structures Lead confirmation:**
3.10	Place the entire Fin Can on a scale and record the weight to update simulations.	**Weight:**

4. MAIN RECOVERY ASSEMBLY

Required Personnel		Confirmation
Student Team Lead	Katelyn Yount	
Safety Officer	Megan Rink	
Recovery Lead	Trent Couse	
Main Recovery Personnel 1		
Main Recovery Personnel 2		

Required Materials			
Item	**Quantity**	**Location**	**Completion**
Safety Glasses	5	Safety Box	
Main Parachute Shock Cord between loops 3 and 4 (long)	1	Recovery Box	
Deployment Bag Shock Cord between loops 5 and 6 (short)	1	Recovery Box	
Rubber Bands	2	LD Toolbox Bottom Drawer	
Quicklinks 3, 4, and 6	3	Avionics Box	
Main Parachute Bay	1	-	
AVAB	1	-	
Electrical Tape	1	LD Toolbox Top Drawer	
Plastic Rivets	4	Vehicle Box	
Main Parachute Deployment Bag	1	Recovery Box	
Nose Cone	1	-	
Main Parachute	1	Recovery Box	
#4-40 ½" long nylon shear pins	4	Vehicle Box	
Biodegradable Insulation	1	-	
Blue Tape	1	LD Toolbox Top Drawer	
Superlube	1	LD Toolbox Bottom Drawer	
Scale	1	-	

Number	Task	Completion
4.1	Confirm that all members within the assembly tent are wearing **safety glasses.**	**Safety Officer confirmation:**
4.2	Accordion fold the **shock cord** between loops 3 and 4 into 10-12 inch lengths. Leave 2 feet of shock cord between the accordion folded **shock cord** and loop 3.	
4.3	Secure the accordion folded **shock cord** between loops 3 and 4 with a single **rubber band.** The **rubber band** should be loose enough that two fingers fit between it and the **shock cord.** Attach the rubber band such that it will stay on the shock cord after deployment.	
4.4	Confirm the **shock cord** is folded accordion style.	**Recovery Lead confirmation:**
4.5	Attach quicklink 3 to **main parachute shock cord** loop 3. Do not tighten **quicklink 3.**	
4.6	Attach quicklink 3 to **deployment bag shock cord** loop 5. Do not tighten **quicklink 3**.	
4.7	Slide **quicklink 3** through the forward end of the **main parachute bay** towards the **AVAB**.	
4.8	Attach **quicklink 3** to **Forward AVAB Bulkhead** U-bolt.	
4.9	Tighten **quicklink 3** by hand until secure. **Blue tape** over the connection to ensure the shock cord will not unthread the closure.	
4.10	Confirm that the **shock cord** is connected to the **AVAB** by visual inspection and applying a tensile force to the **shock cord.**	**Recovery Lead confirmation:**
4.11	Attach **quicklink 6** to shock cord loop 6. Do not tighten **quicklink 6.**	
4.12	Slide shock cord loop 6 through the **main parachute bay** towards the nose cone. A second person should hold shock cord loop 6 at the forward end of the **main parachute bay.**	
4.13	Apply a coating of **superlube** to the forward end of the **AVAB** coupler.	
4.14	Slide the aft end of the **main parachute bay** onto the forward end of the **AVAB** coupler, aligning the alignment marks.	
4.15	Insert 4 **plastic rivets** into the 4 rivet holes.	
4.16	Attach **quicklink 6** to the black loop at the non-opened end of the **main parachute deployment bag.**	
4.17	Tighten **quicklink 6** by hand until secure. **Blue tape** over the connection to ensure the **shock cord** will not unthread the closure.	

4.18	Confirm the **main parachute** is folded properly inside the **deployment bag** (according to mentor and manufacturer recommendations).	**Recovery lead confirmation:**
4.19	Attach **quicklink 4** to the main parachute attachment mechanism. Do not tighten **quicklink 4**.	
4.20	Confirm that the **deployment bay shock cord** and **main parachute shock cord** are not tangled within the main parachute bay.	**Recovery Lead confirmation:**
4.21	Attach **quicklink 4** to shock cord loop 4. Do not tighten **quicklink 4.**	
4.22	Attach **quicklink 4** to the **nose cone** bulkhead U-bolt.	
4.23	Tighten **quicklink 4** by hand until secure. **Blue tape** over the connection to ensure the **shock cord** will not unthread the closure.	
4.24	Confirm that **quicklink 4** is secured to the **nose cone** U-bolt by visual inspection applying a tensile force on the **main parachute shock cord.**	
4.25	Place 2 generous handfuls of **biodegradable insulation** into the **main parachute bay**. Break up chunks in the insulation as it is inserted into the **main parachute bay.**	
4.26	Carefully insert the **main parachute shock cord** into the **main parachute bay.** Insert the **main parachute shock cord** such that **quicklink 3** naturally pulls down and **quicklink 4** naturally pulls up.	
4.27	While firmly grasping the deployment bag wrapped **main parachute,** remove the **rubber band. Team Lead: Place this rubber band on wrist**.	**Team Lead confirmation:**
4.28	Confirm all **rubber bands** are removed from the **deployment bag** wrapped **main parachute.**	**Recovery Lead confirmation:**
4.29	Roll up the **main parachute** lengthwise. Ensure the flap on the **main parachute deployment bag** opens towards the **nose cone**. Insert the **main parachute deployment bag** into the main parachute bay such that it is to the side of the **main parachute shock cord**, not directly on top of it. Simultaneously insert the **nose cone** into the **main parachute bay.**	
4.30	Insert 4 #4-40, ½ inch long nylon **shear pins** into the shear pin holes. **Electrical tape** over all four shear pins to ensure they stay in place.	
4.31	Place the entire assembly on a **scale** and record the weight to update simulations.	**Weight:**

4.32	Confirm that the Launch Vehicle holds its own weight by holding the Launch Vehicle vertically by the **Nose Cone**, letting the rest of the rocket hang free. Lightly shake the Launch Vehicle vertically for further confirmation.	**Recovery Lead confirmation:**

5. MOTOR ASSEMBLY

Required Personnel		Confirmation
Student Team Lead	Katelyn Yount	
Safety Officer	Megan Rink	
Aerodynamics Lead	Aubri Sprouse	
Motor Personnel 1		
Motor Personnel 2		

Supervisor	Tripoli/NAR #	Confirmation

Required Materials			
Item	**Quantity**	**Location**	**Completion**
Nitrile Gloves	5	Safety Box	
Motor Assembly Instructions	1	Energetics Box	
Motor Reload Kit	1	Energetics Box	
Motor Casing	1	Energetics Box	
Forward Closure	1	Energetics Box	
Aft Closure	1	Energetics Box	
Forward Seal Disk	1	Energetics Box	
Phenolic Liner	1	Energetics Box	
Original Gorilla Glue	1	LD Toolbox Bottom Drawer	
Dowel	1	LD Toolbox Bottom Drawer	
Motor Ignitor	1	Energetics Box	
Super Lube	1	LD Toolbox Bottom Drawer	
Wire Strippers	1	LD Toolbox Middle Drawer	
Wire Snippers	1	LD Toolbox Middle Drawer	
Blue Tape	1	LD Toolbox Top Drawer	
Paper Towel	1	Energetics Box	
Scale	1	-	

Number	Task	Completion
5.1	Gather all materials and go to the L3 mentor at their table to receive permission to begin motor assembly.	
5.2	Confirm that all members constructing the motor are wearing **nitrile gloves.**	**Safety Officer confirmation**:
5.3	Line up each motor component with the 1:1 drawings on the **assembly instructions.**	
5.4	Inspect each motor grain for voids.	**Aerodynamics Lead confirmation:**
5.5	Place all motor components on a **scale** individually and record the weights. Note weights of propellant grains and delay grain to calculate burnout motor mass for simulations.	**Propellant grains total weight:** **Delay grain weight:**
5.6	Wipe the dust from the inside of the **phenolic liner** with a **paper towel.**	
5.7	Dry fit the propellant grains into the **liner** to verify they fit. If the fit is too tight, peel the outer glassine layer in order to fit the grains into the liner.	
5.8	Apply a thin coat of **glue** to the outside of the propellant grain. Avoid getting any **glue** on the face of the grain or inside of the grain core.	
5.9	Push one motor grain into the **liner** from the nozzle end, twisting the grain as it is pushed into the **liner**. Push the grain in approximately 1 inch past the end of the **liner**. There is no orientation for inserting the grains.	
5.10	Insert a grain spacer O-ring on top of the motor grain.	
5.11	Repeat steps 5.9 and 5.10 for all propellant grains and O-rings.	
5.12	Remove any excess **glue** from the **phenolic liner**.	
5.13	Insert the nozzle into the **liner**.	
5.14	Place the **linear** and grain assembly on a table, resting on the nozzle. Support the assembly such that the **liner** and grain assembly do not fall over while curing.	

5.15	Push the top grain (forward end) down, and wipe off any remaining **glue** from both the inside and outside end of the liner.	
5.16	Let the grain assembly cure for at least 12 hours	
5.17	Use **Super Lube** to lightly grease the forward, aft, and forward seal disk O-Rings identified by the motor manual.	
5.18	Use **Super Lube** to lightly grease threads on the **motor casing**.	
5.19	Use **Super Lube** to lightly grease one end of the smoke grain.	
5.20	Push the smoke assembly into the **forward closure**, greased end first.	
5.21	Install the forward seal disk O-ring into the groove in the **forward seal disk.**	
5.22	Use **Super Lube** to lightly grease the forward end of the **phenolic liner.**	
5.23	Insert the **forward seal disk** assembly into the forward end of the **motor liner** assembly until snug.	
5.24	Insert the **phenolic liner** into the **motor casing** until it is recessed equally from both ends of the case.	
5.25	Insert the forward O-ring into the forward end of the **motor casing**. The forward O-ring should be seated against the forward end of the **forward seal disk** assembly.	
5.26	Thread the **forward closure** into the forward end of the **motor case**, on top of the forward O-ring until seated. Hand tighten.	
5.27	Slide the aft O-ring around the nozzle until it is seated into the groove on the nozzle.	
5.28	Thread the **aft closure** into the aft end of the **motor case.** Hand tighten.	
5.29	Place the motor on a **scale** and record the weight to update simulations.	
5.30	Install nozzle cap with a corner cut.	
5.31	Prepare the **motor ignitor**.	
5.32	Hold **motor ignitor** wire along the side of the **motor casing.**	
5.33	Designate appropriate length by parking ignitor wire with **blue tape.**	
5.34	Separate ends of ignitor wire with **wire snippers.**	
5.35	Strip ends of ignitor wire with **wire strippers.**	
5.36	Coil **ignitor** wire back into original orientation.	
5.37	Tape **ignitor** to side of casing.	
5.38	Return to launch vehicle assembly tent with motor and prepared **ignitor**. Keep motor away from other personnel until checklist item 6.3	

6. DROGUE RECOVERY ASSEMBLY

Required Personnel		**Confirmation**
Student Team Lead	Katelyn Yount	
Safety Officer	Megan Rink	
Recovery Lead	Trent Couse	
Drogue Recovery Personnel 1		
Drogue Recovery Personnel 2		

Required Materials			
Item	**Quantity**	**Location**	**Completion**
Safety Glasses	5	Safety Box	
Motor Casing	1	Energetics Box	
Motor Eye-bolt	1	Vehicle Box	
Fin Can	1	-	
Motor Retainer	1	Vehicle Box	
Motor Retainer Screws (#8-32 ¾")	2	Vehicle Box	
AVAB	1	-	
Drogue Parachute	1	Recovery Box	
Drogue Parachute Nomex	1	Recovery Box	
Biodegradable Insulation	1	-	
Drogue Parachute Shock Cord between loops 1 and 2	1	Recovery Box	
Quicklinks 1 and 2	2	Avionics Box	
#4-40 ½" Nylon Shear Pins	4	Vehicle Box	
Screwdriver	1	LD Toolbox Middle Drawer	
Rubber Bands	2	LD Toolbox Bottom Drawer	
Blue Tape	1	LD Toolbox Top Drawer	
Air Brakes Pull Pin	1	Avionics Box	

Number	**Task**	**Completion**
6.1	Confirm that all members within the assembly tent are wearing **safety glasses.**	**Safety Officer confirmation:**

6.2	Thread the **eye-bolt** into the forward end of the **motor casing.**	
6.3	Slide the forward end of the **motor casing** into the aft end of the **fin can,** using the centering rings for alignment.	
6.4	Place the **motor retainer** on top of the **motor casing** and align the holes.	
6.5	Secure the **motor casing** using the **motor retainer**: Insert 4 **#8-32 ¾ inch screws** into the four holes in the **motor retainer** and screw them into the thrust plate. Tighten with a **screwdriver**. Note: tighten all four screws little by little to ensure the **motor retainer** is attached to the RMFS straight.	
6.6	Accordion fold the **shock cord** between loops 1 and 2 in 10-12 inch lengths. Leave between 1 and 2 feet between the accordion folded **shock cord** and both loops 1 and 2.	
6.7	Secure the accordion folded **shock cord** between loops 1 and 2 with a single **rubber band**. The **rubber band s**hould be loose enough that two fingers fit between it and the **shock cord.** Attach the rubber band such that it will stay on the shock cord after deployment.	
6.8	Confirm the **shock cord** is folded accordion style.	**Recovery Lead confirmation:**
6.9	Attach **quicklink 1** to **shock cord** loop 1. Do not tighten **quicklink 1.**	
6.10	Attach **quicklink 1** to the **eye bolt** at the forward end of the **motor casing.**	
6.11	Tighten **quicklink 1** by hand until secure. Tape over the connection using blue tape to ensure the **shock cord** will not unthread the closure.	
6.12	Confirm the **shock cord** is connected to the **motor casing** by visual inspection and applying a tensile force to the **shock cord.**	**Recovery Lead confirmation:**
6.13	Confirm the **drogue parachute** is folded properly (according to mentor and manufacturer recommendations)	**Recovery Lead confirmation:**
6.14	While firmly holding the **drogue parachute**, remove the **rubber band** securing the parachute.	
6.15	Confirm all **rubber bands** are removed from the **drogue parachute** and shroudlines.	**Recovery Lead confirmation:**
6.16	While still firmly holding the **drogue parachute**, wrap the **nomex** cloth around the **drogue parachute** like a burrito. Place the same **rubber band** from checklist item 6.14 around the folded up **nomex** with the **drogue parachute** inside to hold everything in place.	
6.17	Ensure there is no open gap in the **nomex** on the **quicklink** attachment side, such that the parachute will not be exposed to ejection charges.	**Recovery Lead confirmation:**
6.18	Attach **quicklink 2** to shock cord loop 2. Do not tighten **quicklink 2**	
6.19	Attach **quicklink 2** to drogue parachute attachment mechanism. Do not tighten **quicklink 2.**	
6.20	Attach **quicklink 2** to **Aft AVAB Bulkhead** U-bolt.	
6.21	Tighten **quicklink 2** by hand until secure. Tape over the connection to ensure the **shock cord** will not unthread the closure.	
6.22	Confirm the **shock cord** is secured to the **AVAB** by visual inspection and pulling on the **shock cord.**	**Recovery Lead confirmation:**
6.23	Carefully insert the length of **shock cord** between loops 1 and 2 into the **drogue parachute bay**.	
6.24	Place 2 handfuls of **biodegradable insulation** into the **drogue parachute bay**. Break up the clumps in the insulation as it is inserted into the **drogue parachute bay.**	
6.25	Firmly grasp the **nomex** wrapped **parachute**. Remove the **rubber band** from the **nomex** wrapped **drogue parachute**. **Team Lead: place rubber band on wrist.**	**Team Lead confirmation:**
6.26	Confirm all **rubber bands** are removed from the **nomex** wrapped **drogue parachute.**	**Recovery Lead confirmation:**
6.27	Remove the Air Brakes **pull pin.**	
6.28	Carefully insert the **drogue parachute** into the **fin can.**	
6.29	Slide the **AVAB** coupler into the **fin can**, aligning the alignment marks.	
6.30	Insert 4 #4-40, ½ inch long nylon **shear pins** into the **shear pin** holes.	
6.31	**Electrical tape** over the **shear pins** to ensure they stay in place during flight.	
6.32	Replace the Air Brakes **pull pin.**	
6.33	Confirm that the Launch Vehicle holds its own weight by holding the Launch Vehicle vertically by the main parachute bay, letting the rest of the rocket hang free. Lightly shake the Launch Vehicle vertically for further confirmation.	**Recovery Lead confirmation:**

7. FINAL MEASUREMENTS

Required Personnel		Confirmation
Student Team Lead	Katelyn Yount	
Safety Officer	Megan Rink	
Aerodynamics Lead	Aubri Sprouse	
Final Measurements Personnel 1		
Final Measurements Personnel 2		

Required Materials			
Item	**Quantity**	**Location**	**Completion**
Launch Vehicle (Assembled)	1	-	
Tape Measure	1	LD Toolbox Top Drawer	
Blue Tape	1	LD Toolbox Top Drawer	
Sharpie	1	LD Toolbox Top Compartment	
Rope	1	LD Toolbox Bottom Drawer	
Scale	1	-	
Field Recovery Box	2	-	

Number	Task	Completion
7.1	Using a **tape measure** that is level to the ground, measure the center of pressure of the launch vehicle. This point is located 70.05 inches from the tip of the nose cone.	
7.2	Mark the center of pressure by writing CP on a piece of **blue tape** that is stuck to the rocket.	
7.3	Using a **rope** tied around the rocket, measure the center of gravity by moving the **rope** along the body of the launch vehicle until it balances at a singular point.	
7.4	Mark the center of gravity by writing CG or drawing the center of gravity symbol on a piece of **blue tape** that is stuck to the rocket.	
7.5	Record the weight of the launch vehicle by placing it on a **scale**.	**Record weight here:**
7.6	Ensure that the center of gravity of the rocket is forward of the Air Brakes fin slots to meet NASA Requirement 2.15.	**Integration Lead confirmation:**
7.7	Using a **tape measure** that is level to the ground, measure the center of gravity of the launch vehicle.	
7.8	Calculate the static stability margin of the rocket using the formula (CP-CG)/D, where D is equal to 6 for this launch vehicle. The stability margin MUST be greater than 2.0.	**Record stability margin here: Integration Lead confirmation:**
7.9	Team Lead confirm that there are two rubber bands around their wrist.	**Team Lead confirmation:**
7.10	Load the **field recovery box** with the items required by Checklist 8: Launch Pad.	
7.11	Proceed to the RSO desk.	

8. LAUNCH PAD

Required Personnel		Confirmation
Student Team Lead	Katelyn Yount	
Safety Officer	Megan Rink	
Recovery Lead	Trent Couse	
Payload Lead	Connor Swanson, Ryan Keever, Samuel Patterson	
Launch Pad Personnel 1		
Launch Pad Personnel 2		
Launch Pad Personnel 3		

Required Materials			
Item	**Quantity**	**Location**	**Completion**
Launch Vehicle (assembled)	1	-	
Flight Card	1	-	
Motor ignitor	1	Energetics Box	
Vaseline	1	LD Toolbox Top Compartment	
Nitrile Gloves	1	Safety Box	
Heavy Duty Gloves	2	Safety Box	
Safety Glasses	1	Safety Box	
Screwdriver	1	LD Toolbox Middle Drawer	
Adjustable Wrench	1	LD Toolbox Middle Drawer	
Phone	1	-	
Laptop	1	Student Backpack	
Wire Snippers	1	LD Toolbox Middle Drawer	
Wire Strippers	1	LD Toolbox Middle Drawer	
Blue Tape	1	LD Toolbox Top Drawer	
Fire extinguisher	1	Safety Box	
EggFinder Receiver	1	Student Backpack	
Pull Pins			

Number	Task	Completion
8.1	Fill out a **flight card** with relevant launch vehicle and payload information and submit to RSO for review.	
8.2	Confirm with the RSO that field conditions are safe for launch.	
8.3	Confirm with the RSO that the launch pad is safe to approach, then proceed to the launch pad.	
8.4	Record the coordinates of the launch pad to calculate drift distance.	**GPS Coordinates:**
8.5	Confirm that the blast deflector is secured to the launch rail.	**Safety Officer confirmation:**
8.6	Lower the launch rail until it is parallel with the ground using a **wrench** to loosen the bolt.	
8.7	Slowly slide the launch vehicle onto the launch rail, aft end first, aligning the rail buttons with the forward slots in the launch rail.	
8.8	Confirm that the launch vehicle slides smoothly onto the rail.	**Safety Officer confirmation:**
8.9	If there is any resistance while completing checklist item 8.8, remove the launch vehicle from the launch rail, apply **vaseline** to the forward slots in the launch rail, then repeat checklist item 8.8.	
8.10	Rotate the launch rail to an upright position until it is pointed at least 5 degrees away from spectators.	
8.11	Lock the launch rail into place using a **wrench**, and confirm that it is secure.	**Safety Officer confirmation:**
8.12	Invite the rest of the Launch team to the launch pad for pictures.	
8.13	Take team pictures.	
8.14	Send all non-essential personnel back to their designated safe distance from the launch pad.	
8.15	Confirm that all remaining personnel are wearing **safety glasses.**	**Safety Officer confirmation:**

8.16	Complete steps 8.17-8.20 (airbrakes), 8.21, and 8.22–8.36 (recovery) simultaneously as necessary.	
Airbrakes		
8.17	Turn on air brakes (pull both pins).	
8.18	Create a mobile hotspot on a **phone** with name: HPRC, password: tacholycos, band: 2.4 GHz Wait for the pi to connect to the hotspot (note IP address), and then, run on a **laptop**: `ssh pi@[Pi IP Address]` Connect via tmux, run: `tmux new -s airbrakes`	
8.19	Navigate to the AirbrakesV2 directory (if not already in it) run: `cd AirbrakesV2/` Now run: `python3 main.py -v` You should now see a display of what the air brakes code is doing	
8.20	Continue to monitor the display before launch, making sure it stays in **StandbyState**. If the display reports an invalid field from the IMU, restart the pi by running: `` `sudo reboot` `` Then repeat steps 8.17-8.19. Once the rocket is about to launch, detach from the session by pressing **Ctrl + b**, then **d** *Note: even if you don't detach and it simply loses due to being out of range, everything will still run fine*	
Payload		
8.21	Enable Hotspot: • Hotspot Name: HPRC_WARHEAD • Password: tacholycos Remove the **Pull Pin**: • Ensure the **pull pin** is removed before proceeding. Verify Raspberry Pi Connection: • Confirm that the Raspberry Pi connects to the hotspot. Record the hotspot's IP address. Access the Raspberry Pi via SSH: • Establish an SSH connection to the Raspberry Pi. Don't use VSCode! (It slows the pi down) Initialize a TMUX Session:	**Record/ List Callsign:**

	Create a new TMUX session using the following command:
	
	`tmux new -s launch`
	
	Ensure that the pi is not muted. To check, run
	
	`alsamixer`
	
	Activate the Python Virtual Environment:
	Navigate to the appropriate directory (if not already there), then activate the virtual environment:
	
	`source env/bin/activate`
	
	Run the Main Script:
	Execute the main program:
	bash
	Copy
	`python main.py`
	• `Type in Callsign into prompt`
	• Verify that all data streams are functioning correctly.
	
	Detach the TMUX Session:
	
	• Detach from the session without stopping it:
	  ○ Press `Ctrl + b`, then `d`.
	
	Set up a laptop to hear the transmission:
	
	• Plug in the BTECH-APRS-V01.2 to the handheld radio and the laptop.
	• In sound settings, ensure the microphone input is set to "listen to this device"
	• Ensure the handheld radio is turned on and tuned to the launch day frequency (typically 144.390)
	• Ensure the handheld radio has sufficient battery.
	• Start Direwolf with the correct config file. E.g. `.\direwolf-1.7.0-9807304_x86_64\direwolf-1.7.0-9807304_i686\direwolf.exe -t 0 -c direwolf.conf`
	• Ensure that direwolf has selected the headset microphone as the input device: "* 0: Headset Microphone"
	• Ensure that direwolf has properly started. The last line should be:
	"Ready to accept AGW client application 0 on port 8000 …"	

Recovery		

8.22	Confirm that the GPS is transmitting correctly via the **EggFinder receiver**.	
8.23	Pull **pull pin** half way out of the pull pin switch to arm the easy mini.	
8.24	Confirm that the easy mini is programmed correctly and connected to both the primary and secondary black powder charges via 10. Appendix.	**Recovery Lead confirmation:**
8.25	Pull the **pull pin** completely out of the pull pin switch to arm the stratologger	
8.26	Confirm that the stratologger is programmed correctly and connected to both the primary and secondary black powder charges via 10. Appendix.	**Recovery Lead confirmation:**
8.27	Use **wire snippers** to separate the two **motor ignitor** wires.	
8.28	Strip at least 1 inch of insulation from each of the **motor ignitor** wires using **wire strippers**.	
8.29	Remove the red cap from the aft end of the motor.	
8.30	Insert the **motor ignitor** fully into the motor until it won't go any further.	
8.31	Secure the motor ignitor to the aft end of the motor via the same red cap, **tap**e, or the weight of the launch vehicle.	
8.32	Confirm that power to the launch pad is turned off/ unplugged.	**Safety Officer confirmation:**
8.33	Connect the **motor ignitor** wires to the power supply via alligator clips. Clip the alligator clip to the end of the wire, then wrap the rest of the exposed wire around the alligator clip to ensure continuity.	
8.34	Set the alligator clips on the launch stand such that they are not touching anything metal and they are not touching one another.	
3.35	Conduct a continuity test of the ignition system, measurements should read between 1.5 and 3.5.	
8.36	All personnel return back to their designated safe distance from the launch pad.	
8.37	Ensure that all pull pins from the launch vehicle are in the field recovery toolbox.	
8.38	Pass the primary checklist and field recovery toolbox to the Safety Officer for Checklist 9. Field Recovery	
8.39	Inform the RSO that the rocket is ready for launch.	
8.40	Launch!	

9. FIELD RECOVERY

Required Personnel		**Confirmation**
Student Team Lead	Katelyn Yount	
Safety Officer	Megan Rink	
Recovery Lead	Trent Couse	
Field Recovery Personnel 1		
Field Recovery Personnel 2		

Required Materials			
Item	**Quantity**	**Location**	**Completion**
Launch Vehicle (Unassembled)	1	-	
Safety Glasses	5	Safety Box	
Nitrile Gloves	5	Safety Box	
Heavy Duty Gloves	1	Safety Box	
Rubber Bands	1	Safety Box	
Blue Tape	1	Safety Box	
Fire Extinguisher	1	Safety Box	
Pull Pins	3	Safety Box	
Phone/Camera	1	-	

Number	**Task**	**Completion**
9.1	Confirm that all recovery personnel are wearing **safety glasses.**	**Safety Officer confirmation:**
9.2	Confirm that all personnel that will be handling the launch vehicle are wearing **nitrile gloves.**	**Safety Officer confirmation:**
9.3	Approach the launch vehicle on foot.	
9.4	Before touching the launch vehicle, take pictures of it in its as-landed configuration with a **camera**.	
9.5	If a parachute is open and dragging the launch vehicle across the field, follow the procedure below. Otherwise, proceed to checklist item 9.6. a. Approach the parachute from the billowed side.	

	b. Use your hands and body to pull down the parachute from the back and by the canopy. Do not grab the shroud lines or shock cord to reduce the risk of entanglement. c. Repeat for each parachute as necessary.	
9.6	If any parts of the launch vehicle appear to be on fire or smoking, use the **fire extinguisher** in the recovery toolbox to put out the fire. This should only be done by the Safety Officer, Team Lead, or Recovery Lead.	
9.7	Using a **rubber band,** secure the main parachute for transportation back to the team's assembly area. This prevents accidental tearing.	
9.8	Using a **rubber band,** secure the drogue parachute for transportation back to the team's assembly area. This prevents accidental tearing.	
9.9	Carefully pick up the forward end of the main parachute bay and inspect the blast caps on the **Forward AVAB Bulkhead** for unblown charges. The Recovery Lead or Safety Officer must be the first person to touch the Launch Vehicle.	
9.10	Carefully pick up the aft end of the AVAB bay and inspect the blast caps on the **Aft AVAB Bulkhead** for unblown charges. Again, this should be done by the Recovery Lead or Safety Officer.	
9.11	Record the measured apogee from each altimeter using 10. Appendix.	
9.12	Insert the **pull pin** to power off both altimeters for transportation back to the team's assembly area.	
	Insert Air Brake **pull pin** to power off the Air Brake module.	
9.13	Record the coordinates of the final resting position of the launch vehicle to calculate drift distance.	**GPS Coordinates:**
9.14	Take pictures of any damage to the launch vehicle.	
9.15	Inspect the launch field for non-biodegradable waste.	
9.16	Insert payload pull pin for and disarm the WARHEAD	
9.17	Collect the launch vehicle and return to the launch site. If there are un-blown charges, hold that section with fireproof gloves, and point the past caps away from personnel on the walk back to the assembly area.	
9.18	Proceed to Post-Launch Checklist.	

10. Appendix

Perfect Flite StratologgerCF Beep Chart

When the altimeter is turned on, it will report its current settings and other information before readying itself for flight. This is what you will hear:

- If the altimeter detected an abnormal condition on the previous flight, a short siren tone will sound, followed by one or more digits representing the error code(s), and a second siren tone. The error codes are listed below:
  - **1: Total power loss during last flight.** Downloading the data with the optional DT4U USB interface can help you to determine the exact time of the power loss, which will aid in diagnosing the underlying cause.
  - **2: Momentary power loss during last flight.** The battery voltage to the altimeter dropped briefly to less than 50% of its initial voltage at some point during the flight. The altimeter's brownout protection allowed the altimeter to continue normal operation, but a loose connection or other issue is likely. Inspecting the downloaded voltage data will aid in diagnosing the underlying cause.
  - **3: Drogue current exceeded 6 amps.** When the drogue output was activated, the e-match current was greater than 6 amps. The e-match may have been shorted, or an inappropriate e-match/battery combination is in use. Repeated operation with this condition can lead to damage of the altimeter.
  - **4: Main current exceeded 6 amps.** When the main output was activated, the e-match current was greater than 6 amps. The e-match may have been shorted, or an inappropriate e-match/battery combination is in use. Repeated operation with this condition can lead to damage of the altimeter.
  - **5: Problem detected with FLASH memory.** The selftest detected a read/write error with the flight data memory. Contact PerfectFlite for assistance.
  - **6: Problem detected with pressure sensor.** The selftest detected an error with the pressure sensor. The altimeter will not continue with the powerup sequence if this error is present. DO NOT FLY. Contact PerfectFlite for assistance. If you get an error code on powerup, please inspect your installation and make any corrections necessary to prevent future problems. The error will clear automatically after the next flight if new errors are not encountered.
- A one digit number (range of 1 to 9) corresponding to the currently-selected program preset. The preset stores the main chute deployment altitude setting (and the apogee delay setting, if used). The factory default is preset 3, which equates to main deployment at 700 feet and no apogee delay (see table on page 23).
- A two second pause, and then a three or four digit number (range of 100 feet to 9,999 feet) corresponding to the main deploy altitude setting from the currently-selected program preset. This is the altitude that your main chute will deploy at.
- (optional, only if you have added an apogee delay to the currently selected preset: A two second pause, and then a five second continuous tone to warn you that your apogee firing is set to be delayed. If you hear this tone, and don't expect an apogee delay, then: STOP, do not launch, and either modify the preset with a computer or select another preset that does not have an apogee delay.)
- A two second pause, and then a three to six digit number (range of 160 feet to 103,500 feet) representing the apogee altitude of the last flight.

- A two second pause, and then a two or three digit number representing the battery voltage in tenths of a volt (e.g. 9.2 volts would report as 92).
- A two second pause (or more if you have added an optional Powerup Delay using the setup software), and then continuity beeps repeated every 0.8 seconds: A single beep means drogue e-match continuity is OK, two beeps means main e-match continuity is OK, three beeps means both drogue & main have good continuity. If the altimeter remains silent at this point, it means that there is no continuity on either e-match terminal block. If the reported continuity does not match what you expect, inspect your e-match wiring and correct before launching!

While reporting continuity, the altimeter will begin tracking ground level pressure, and will continuously update its internal ground reading to follow fluctuations in ground level
pressure until time of launch. The altimeter is ready to launch at this point.

After flight the altimeter will report in this sequence:

- An extra-long tone to indicate the start of the reporting sequence.
- A three to six digit number representing the peak altitude in feet.
- A long separator tone followed by a two to five digit number representing the maximum velocity during the flight in miles per hour.
- If the “siren delay” number is set to a number greater than zero (the default is 5 seconds, and it is changeable in the setup menu of the download software), the altimeter will wait for the specified siren delay time, and then emit a 10 second warbling siren tone. This will aid in locating the rocket if it is hidden from sight in a tree, tall grass, etc. If you do not want to use this feature, set the Siren Delay setting to “0” and it will be disabled.
- After a 10 second period of silence, the sequence repeats until power is disconnected. Flight data and peak altitude are preserved when power is turned off.

Altus Metrum EasyMini Beep Chart

Here’s a short summary of all of the modes and the beeping that accompanies each mode. In the description of the beeping pattern, “dit” means a short beep while "dah" means a long beep (three times as long). “Brap” means a long dissonant tone.

Name	Beeps	Description
Neither	brap	No continuity detected on either apogee or main igniters.
Apogee	dit	Continuity detected only on apogee igniter.
Main	dit dit	Continuity detected only on the main igniter.
Both	dit dit dit	Continuity detected on both igniters.
Storage Full	warble	On-board data logging storage is full. This will not prevent the flight computer from safely controlling the flight or transmitting telemetry signals, but no record of the flight will be stored in on-board flash.

7.3 Safety Documentation Methods

Safety documentation is performed through the use of FMEA (Failure Modes and Effects Analysis) tables, Likelihood-Severity (LS) matrices, and Fault Tree Analysis (FTA). This process identifies hazards to the project, subsystems, personnel, and environment, along with their causes, effects, likelihood and severity before mitigation, mitigation procedures, the likelihood and severity after mitigation, and the verification methods.

Verification of safety procedures are checked through a variety of sources, including but not limited to, inspection, Launch Day Checklists, NAR/Tripoli Safety Codes, Tests, Requirements, and HPRC safety codes.

Figure 7.1 below shows the likelihood and severity (LS) matrix used to evaluate hazards before and after mitigation procedures. The level of severity is defined as low, medium, high, or severe risk (Figure 7.1). The likelihood is defined as very unlikely, unlikely, likely, or very likely (Figure 7.1). The combined likelihood and severity are color coded, where orange and red represent failure modes, which are eliminated after mitigation.

Additionally, Fault Tree Analysis is conducted on each major subsystem of the project, including structures, recovery, payload, and Air Brakes. This enables the team to identify potential causes of system failure by visualizing fault paths in a hierarchal diagram. By analyzing these failure modes, the team can assess the impact of specific risks and develop specific mitigation methods.

Table 7.1: FMEA LS Matrix

		Level of Severity			
		1 Low Risk	2 Medium Risk	3 High Risk	4 Severe Risk
Likelihood of Occurrence	A Very Unlikely	1A	2A	3A	4A
	B Unlikely	1B	2B	3B	4B
	C Likely	1C	2C	3C	4C
	D Very Likely	1D	2D	3D	4D

Table 7.2: FMEA Severity Key

Level of Severity			
1 Low Risk	2 Medium Risk	3 High Risk	4 Severe Risk
Negligible damage to vehicle, personnel and environment unharmed, does not impact development.	Minimal damage to vehicle, personnel can be easily treated with first aid, environment is minimally harmed, minimal impact on development.	Moderate damage to vehicle, personnel require intensive first aid or eventual treatment by a medical professional, environment has moderate damage, significant impact on development.	Irreparable damage to vehicle, personnel require immediate medical attention, personnel death, environment is destroyed, incomplete project, missed milestone.

Table 7.3: FMEA Likelihood Key

Likelihood of Occurrence			
A Very Unlikely	B Unlikely	C Likely	D Very Likely
1-10% Occurrence	11-25% Occurrence	26-65% Occurrence	66-100% Occurrence

7.4 Personnel Hazard Analysis

This FMEA & LS matrix discusses the causes and mitigations for hazards that could injure team personnel and surrounding civilians. It goes in depth on the type of injuries that could be sustained and the common locations in which injuries could occur.

7.4.1 Hazards to Personnel

Table 7.4: Personnel Hazards

Label	Hazard	Cause	Effect	LS Pre-Mitigation	Mitigation	LS Post-Mitigation	Verification
Hazards Encountered in Designated Lab Space							
Hazards to Skin and Soft Tissues							
TL.1	Slips, trips, falls	**(1)** Material spills **(2)** Cluttered work environment	Injury requiring first aid, skin abrasion	2C	**(1)** Lab floors are cleaned and inspected after handling of construction materials **(2)** Lab is organized and construction materials are put away after every meeting	2A	**Review:** See HPRC Safety Handbook for lab maintenance guidelines (Appendix 9.4)
TL.2	Fingers or other appendages caught in drill press	**(1)** Misuse of equipment **(2)** Drill bit is caught on clothes, jewelry, or gloves	Loss of appendage, severe damage to muscle or soft tissue	4C	**(1)** Personnel must be trained on operation of the drill press before use. **(2)** Personnel are required to not wear loose clothing, gloves, or jewelry when using the drill press	4A	**Review:** See HPRC Safety Handbook for drill press safety guidelines (Appendix 9.4)
TL.3	Fingers or other appendages caught in bandsaw blade	**(1)** Misuse of equipment **(2)** Bandsaw contact with clothes, jewelry, or gloves	Skin and soft tissue abrasion	4C	**(1)** Personnel must be trained on operation of the bandsaw before use. **(2)** Personnel are required to not wear loose clothing, gloves, or jewelry when using the drill press	4A	**Review:** See HPRC Safety Handbook for bandsaw guidelines (Appendix 9.4)
TL.4	Exposure to uncured epoxy	Working with epoxy	Skin rash or irritation	2D	Personnel are provided with and are required to use gloves and to limit skin contact with epoxy	1B	**Inspection:** See Lab Safety Cabinet for gloves Inspection: Budget Table 8.46
TL.5	Exposure to vaporous chemicals	HazMat off-gassing	Skin rash or irritation	2D	Personnel are provided with and required to use gloves when working with vaporous materials	2A	**Review:** See HPRC Safety Handbook for vaporous chemical guidelines (Appendix 9.4) **Inspection:** Budget Table 8.46
TL.6	Contact with hot components of soldering iron	Misuse of equipment	Mild to severe burns	3D	Personnel must be trained on operation of the soldering iron and proper use of PPE	2B	**Review:** See HPRC Safety Handbook for soldering guidelines (Appendix 9.4)
TL.7	Contact with ejection charges	Inadvertent contact with blown ejection charges during ejection testing	Mild to potentially severe burns	4B	**(1)** Only trained personnel are authorized to conduct ejection testing, trained safety personnel are required to be present for all ejection tests. **(2)** Ejection charges are disconnected and powered off until launch pad. **(3)** Personnel are instructed to not stand directly in front of or behind packed ejection charges.	3A	**Review:** Black Powder Safety Presentation (Appendix 9.4)
TL.8	Contact with airborne shrapnel	Sanding, cutting, drilling brittle or granular materials	Skin and soft tissue abrasion	3C	Personnel must wear the required PPE when working with power tools	1B	**Review:** See HPRC Safety Handbook for power tools guidelines (Appendix 9.4) **Inspection:** Budget Table 8.46
TL.9	Skin exposure to APCP	Motor assembly	Skin rash or irritation	2C	Personnel must wear gloves when assembling any motor	2A	**Inspection:** See Launch Day Checklist Section 7.2 for motor assembly required materials
TL.10	Improper lifting of heavy equipment	**(1)** Poor posture during lifting procedures **(2)** Repetitive lifting	Muscle strain	2C	**(1) & (2)** Personnel are taught how to properly lift heavy objects	2A	**Review:** See HPRC Safety Handbook for general safety practices (Appendix 9.4)
TL.11	Skin contact with hand-held tools	**(1)** Misuse of equipment/tools **(2)** Lack of material clamping **(3)** Inappropriate conduct around lab tools	Skin abrasion, scratch, injury requiring first aid	3C	**(1)** Running and ”fooling around” is not permitted in the lab (especially with active tooling) **(2)** Clamps are used at all times when drilling or screwing into a material (hand or power tool	1B	**Review:** See HPRC Safety Handbook for general safety practices (Appendix 9.4)

Table 7.4: Personnel Hazards

Label	Hazard	Cause	Effect	LS Pre-Mitigation	Mitigation	LS Post-Mitigation	Verification
Hazards to Bones and Joints							
TL.12	Slips, trips, falls	**(1)** Material spills **(2)** Cluttered work environment	Bone break/fracture	2C	**(1)** Lab floors are cleaned and inspected after handling of construction materials **(2)** Lab is organized and construction materials are put away after every meeting	2A	**Review:** See HPRC Safety Handbook for lab maintenance guidelines (Appendix 9.4)
TL.13	Fingers or other appendages caught in bandsaw blade	**(1)** Misuse of equipment **(2)** Bandsaw contact with clothes, jewelry, or gloves	Bone break/fracture	4C	**(1)** Personnel must be trained on operation of the bandsaw before use. **(2)** Personnel are required to not wear loose clothing, gloves, or jewelry when using the drill press	4A	**Review:** See HPRC Safety Handbook for bandsaw guidelines (Appendix 9.4)
TL.14	Collision with dropped heavy equipment	**(1)** Poor grip or handling of tools **(2)** Overloading of personnel **(3)** Heavy objects in high places	Bone break/fracture	4C	**(1)** Gloves are provided as needed for assistance with carrying objects **(2)** Heavy equipment shall be handled by more than one person **(3)** Heavy equipment must be bolted down to tables within the lab space	4A	**(1) Inspection:** Budget Section 8.4 **(2) Review:** See HPRC Safety Handbook for general safety practices (Appendix 9.4) **(3)** Mounting retention verified by NC State
TL.15	Falls from elevated platforms	Retrieving objects in high places	Bone break/fracture, joint dislocation	4B	Personnel shall not stand on movable objects to retrieve objects from high places	3A	**Review:** See HPRC Safety Handbook for general safety practices (Appendix 9.4)
TL.16	Collision with fallen objects	**(1)** Wall mounts for previous rockets come loose **(2)** Items hung on walls fall down due to collision	Bone break/fracture, concussion, skin abrasion	4B	**(1)** All wall and ceiling mounted objects are secured using two stands or methods. **(2)** Running and fooling around is prohibited in the lab space	3A	All wall and ceiling mounted objects are checked for security after installation. Running is prohibited in the HPRC Safety Handbook (Appendix 9.4)
Hazards to Respiratory System							
TL.17	Exposure to chemical fumes	Handling paints and chemicals	Respiratory irritation, difficulty breathing	2D	Personnel are provided with and are required to use N95 masks or respirators when handing paint or other vaporous chemicals	2A	**Inspection:** Budget Section 8.4 **Review:** See HPRC Safety Handbook for vaporous chemical guidelines (Appendix 9.4)
TL.18	Exposure to carcinogenic particles	Working with colloidal silica for epoxy fillets	Respiratory irritation, difficulty breathing, cancer	4C	Personnel are required to wear N95 particulate masks	3A	Inspection: Budget Section 8.4 **Review:** See HPRC Safety Handbook colloidal silica guidelines (Appendix 9.4)
TL.19	Inhalation of spray paint fumes	Working with spray paint for rocket aesthetics	Respiratory irritation/ infection	2D	Spray painting is required to occur outside or in a designated indoor paint booth equipped with ventilation. Personnel are required to wear masks when using spray paint.	2A	**Inspection:** Budget Section 8.4 **Review:** See HPRC Safety Handbook for spray paint PPE (Appendix 9.4)
TL.20	Inhalation of fiberglass particles	Sanding/ cutting fiberglass components	Respiratory irritation, difficulty breathing	3C	Personnel are required to wear particle masks when cutting or sanding fiberglass and use a vacuum	3A	**Inspection:** Budget Section 8.4 **Review:** See HPRC Safety Handbook for fiberglass safety guidelines (Appendix 9.4)
TL.21	Inhalation of aerosolized particles	Sanding, cutting, or drilling	Respiratory irritation, difficulty breathing	2D	Personnel working with power tools that produce particulate matter that could cause respiratory irritation are required to wear masks	2A	**Review:** See HPRC Safety Handbook for general hazard guidelines (Appendix 9.4)
Hazards to Head							
TL.22	Slips, trips, falls	**(1)** Material spills **(2)** Cluttered work environment	Concussion, head wound, dizziness, headaches, drowsiness	2C	**(1)** Lab floors are cleaned and inspected after handling of construction materials **(2)** Lab is organized and construction materials are put away after every meeting	2A	**Review:** See HPRC Safety Handbook for lab maintenance guidelines (Appendix 9.4)
TL.23	Collision with construction equipment	**(1)** Cluttered lab floor **(2)** Distracted personnel	Concussion, head wound, dizziness, headaches, drowsiness	2C	**(1)** Lab floors are cleaned and inspected after handling of construction materials **(2)** Presence of a safety officer at construction meetings to monitor safety	2A	**(1) Review:** See HPRC Safety Handbook for lab maintenance guidelines (Appendix 9.4) **(2) Review:** NASA Requirement 5.3.1
TL.24	Rocket falls from ceiling mount	**(1)** Loose ceiling tile **(2)** Mounting retention failure	Concussion, head wound, dizziness, headaches, drowsiness	4A	**(1)** Yearly maintenance from University Building Management **(2)** Use of sufficiently strong mounting hardware	2A	**(1)** Team lab space registered with NC State University **(2)** Mounting retention verified by NC State Building Management staff

Table 7.4: Personnel Hazards

Label	Hazard	Cause	Effect	LS Pre-Mitigation	Mitigation	LS Post-Mitigation	Verification
TL.25	Exposure to chemical fumes	**(1)** Opening the flame cabinet **(2)** Working with chemicals	Headaches, dizziness, drowsiness	2D	**(1)** The flame cabinet in the lab space must remain closed when not in use. Any chemicals emitting fumes must be kept in the flame cabinet. **(2)** Personnel must wear proper ppe when working with chemicals: respirators, particle masks, face masks	2A	**(1) Inspection:** See flame cabinet in HPRC Lab **(2) Review:** See HPRC Safety Handbook for vaporous chemical guidelines (Appendix 9.4)
TL.26	Collision with fallen objects	**(1)** Wall mounts for previous rockets come loose **(2)** Items hung on walls fall down due to collision	Concussion, head wound, dizziness, headaches, drowsiness	4B	**(1)** All wall and ceiling mounted objects are secured using two stands or methods. **(2)** Running and fooling around is prohibited in the lab space	3A	All wall and ceiling mounted objects are checked for security after installation. Running is prohibited in the HPRC Safety Handbook (Appendix 9.4)
Hazards to Eyes							
TL.27	Exposure to fumes	Working with chemicals	Eye irritation	2D	Personnel working with chemicals are required to wear safety glasses	1A	**Review:** See HPRC Safety Handbook for vaporous chemical guidelines (Appendix 9.4)
TL.28	Exposure to aerosolized particles	**(1)** Working with spray paint **(2)** Sanding, cutting, or drilling	Eye irritation, eye abrasion, temporary blindness, permanent blindness	2D	**(1)** Personnel are required to wear safety glasses when working with spray paint **(2)** Personnel are required to wear safety glasses when drilling or cutting and are provided with safety glasses as needed for sanding	2A	**(1) Review:** See HPRC Safety Handbook for spray paint PPE (Appendix 9.4) **(2) Review:** See HPRC Safety Handbook for general hazard guidelines (Appendix 9.4)
TL.29	Exposure to intense visible light	Welding	Retinal damage temporary/ permanent blindness	4B	Personnel using welding techniques must be trained and tested prior to welding	1A	**Review:** Welding training handbook (Appendix 9.4)
Hazards to Ears							
TL.30	Exposure to loud noises	**(1)** Personnel work with/around power tools **(2)** Premature black powder ignition	Temporary or permanent hearing loss	1D	**(1)** Ear plugs and other hearing protection is provided to personnel when working with power tools **(2)** Energetics are not armed until the LV reaches the launch pad	1B	**(1) Inspection:** Budget Section 8.4 **(2) Inspection:** See Launch Day Checklist Section 7.2 for altimeter/energetics arming only at the launch pad
Hazards Encountered at Launch Sites							
Hazards to Skin and Soft Tissues							
TF.1	Slips, trips, falls	Uneven launch field conditions	Skin abrasion, bruising	2C	Only required personnel are allowed to recover the launch vehicle, closed toe shoes are required	2A	**Inspection:** See Launch Day Checklist Section 7.2 for field recovery required personnel
TF.2	Insect sting/bite	Exposure to outdoors for prolonged periods of time during launch day activities	Skin itchiness, rash, allergic reaction, anaphylaxis	2C	Bug repellent is kept in launch day safety box at all times and is readily available to personnel, personnel who have allergies make the Safety Officer aware before launch day activities	1B	**Inspection:** See Launch Day First Aid Kit for allergy medications (Appendix 9.4)
TF.3	Allergic reaction	**(1)** Personnel with outdoor allergies are exposed to wildlife for prolonged periods of time **(2)** Accidental exposure to allergens **(3)** Personnel are allergic to the crops grown at launch site	Runny nose, sinus pressure, mild allergic symptoms, swelling, rash, hives, anaphylaxis	3C	**(1)** Emergency antihistamine is kept in launch day safety box at all times and is readily available to personnel **(2)** Safety Officer is made aware of any severe allergies before launch day activities **(3)** If a designated recovery personnel is allergic to vegetation or crops where an LV is to be recovered, a suitable replacement for the personnel will be found	1B	**(1) Inspection:** See Launch Day First Aid Kit for allergy medications (Appendix 9.4) **(2) Review:** Allergy Information Form **(3) Inspection:** See Launch Day Checklist Section 7.2 for recovery required personnel
TF.4	Contact with ejection charges	Contact with unblown black powder after touchdown, battery short during avionics installation/arming procedures	Mild to severe burns, bruising, skin abrasions	4B	Personnel carrying the LV after flight must wear fire proof gloves if it contains unblown charges. LV inspected for unblown charges prior to the completion of recovery procedures	3A	**Inspection:** See Launch Day Checklist Section 7.2 for charge inspection procedures

Table 7.4: Personnel Hazards

Label	Hazard	Cause	Effect	LS Pre-Mitigation	Mitigation	LS Post-Mitigation	Verification
TF.5	Excessive exposure to sunlight or UV rays	Long duration of time spent in the sun during launch day activities	Sunburn, sun poisoning, heat stroke, cancer	2D	Personnel are required to dress appropriately for the weather. Personnel are required to use and reapply sunscreen during launch day activities.	1B	**Inspection:** Launch Day First Aid Kit (Appendix 9.4)
TF.6	Contact with high kinetic energy LV components	**(1)** Components disconnect from LV during flight **(2)** Improper sizing of parachutes **(3)** Failure of parachutes to deploy **(4)** Sideways propulsion of LV due to instability	Head injury, skin abrasion, bone fracture	3B	**(1)** Components connections checked by Safety Officer during launch day assembly **(2)** Parachutes sized for 75 ft-lbs maximum kinetic energy at landing **(3)** Parachutes and shock cord Z-folded, altimeters tested prior to launch **(4)** Stability margin must be above 2.0 per NASA Requirement 2.14	2A	**(1) Inspection:** See Launch Day Checklist Section 7.2 for confirmation of recovery attachment during assembly **(2) Inspection:** See Sections 3.6.2 and 3.7.6 for parachute selection and kinetic energy calculations **(3) Test:** See Sections 8.1.12 and 8.1.10 for parachute and shock cord folding, along with planned altimeter test results **(4) Analysis:** The stability is 2.0. See Section 3.7.4 for stability margin analysis for final full-scale design
TF.7	Contact with LV	**(1)** Launch vehicle tips over on launch rail **(2)** Launch vehicle rolls off construction table **(3)** Launch vehicle lands near spectators	Skin abrasion, bruising, muscle tear	3B	**(1)** Launch rails are locked into place when LV is vertical **(2)** LV utilizes stands that do not roll **(3)** Launch rail is angled 5 degrees away from spectators. Personnel are instructed to not try to catch the LV upon landing	2A	**(1) Inspection:** See Launch Day Checklist Section 7.2 for launch rail set-up **(2) Inspection:** See Launch Day Packing List for LV stands (Appendix 9.1.2) **(3) Review:** See HPRC Safety Handbook for rocket handling guidelines (Appendix 9.4)
TF.8	Excessive load placed on personnel muscles	Personnel lift heavy LV components	Muscle strain	2C	At least two personnel are required to carry the LV while it is fully configured	1A	**Review:** See HPRC Safety Handbook rocket handling guidelines (Appendix 9.4)
TF.9	Contact with airborne shrapnel	CATO	Skin abrasion/ laceration	4A	Personnel are the required distance away from the LV according to Tripoli/NAR safety codes. AeroTech motors are chosen for their low likelihood of catastrophic failure.	2A	**Inspection:** Tripoli/NAR Safety Codes
	Excessive amount of exercise/walking	LV lands far from recovery personnel	Muscle strain, shin splints, overuse injuries, twisted ankle, pulled hamstring	3B	**(1)** LV is equipped with a functioning GPS **(2)** Vehicle transportation is utilized if able	2A	**(1) Inspection:** See recovery system design for GPS and the GPS functionality test (Sections 8.1.11 and 3.6.1) **(2)** A car is used to transport the recovery personnel to the nearest spot accessible by car
Hazards to Bones and Joints							
TF.10	Slips, trips, falls	Uneven launch field conditions	Bone break, joint dislocation	2C	Only required personnel are allowed to recover the launch vehicle, closed toe shoes are required	2A	**Inspection:** See Launch Day Checklist Section 7.2 for recovery required personnel **Review:** HPRC Safety Handbook (Appendix 9.4)
TF.11	Excessive amount of walking	LV lands far from launch site, personnel not allowed to drive during recovery	Shin splints, muscle sprain, tendinitis, stress fracture	2D	Personnel are driven a portion of the recovery distance if allowed, all sections of LV required to be equipped with a functional GPS tracker to reduce walking in searching for the LV	1C	**Inspection:** See Launch Day Checklist Section 7.2 for recovery procedures
TF.12	Contact with airborne shrapnel	CATO	Bone fracture, limb loss	4A	Personnel are the required distance away from the LV according to Tripoli/NAR safety codes. AeroTech motors are chosen for their low likelihood of catastrophic failure.	2A	**Inspection:** Tripoli/NAR Safety Codes (Tripoli Safety Code 13-17)
Hazards to Respiratory System							
TF.13	Inhalation of combustion products	Close proximity to motors and ejection charges	Respiratory irritation, difficulty breathing	2B	Personnel stand a minimum distance away from burning motors as determined by NAR/ Tripoli code	1B	**Inspection:** Tripoli/NAR Safety Codes (Tripoli Safety Code 13-17)
TF.14	Inhalation of smoke	Launch field fire	Respiratory irritation, difficulty breathing	2D	**(1)** Personnel in close proximity to launch field fire are provided with N95 masks **(2)** Sparky motors are not used at launch fields	1B	**(1) Review:** See HPRC Safety Handbook for safety and recovery guidelines (Appendix 9.4) **(2)** NASA Requirement 2.23.2

Table 7.4: Personnel Hazards

Label	Hazard	Cause	Effect	LS Pre-Mitigation	Mitigation	LS Post-Mitigation	Verification
Hazards to Head							
TF.15	Contact with airborne shrapnel	**(1)** High kinetic energy LV sections **(2)** CATO	Concussion, head trauma, dizziness, headaches, memory loss	4A	**(1)** The LV has a dual deploy recovery system **(2)** Personnel are the required distance away from the LV according to Tripoli/NAR safety codes. AeroTech motors are chosen for their low likelihood of catastrophic failure.	2A	**(1) Inspection:** See Section 1.2.4 for final recovery system design **(2) Inspection:** Tripoli/NAR Safety Codes (Tripoli Safety Code 13-17)
TF.16	Contact with LV	**(1)** LV lands near spectators **(2)** LV tips over on launch rail	Concussion, head trauma, dizziness, headaches, memory loss	3B	**(1)** The launch rail is angled 5 degrees away from spectators **(2)** Launch rails are locked into place when LV is vertical	2A	**(1) & (2) Inspection:** See Launch Day Checklist Section 7.2 for launch rail angle confirmation
Hazards to Eyes							
TF.17	Eyes have prolonged exposure to the sun	Maintaining vision of a descending LV on a bright/sunny day	Permanent blindness, temporary blindness, cataracts, solar retinopathy, macular degeneration	3C	Personnel are encouraged to wear sunglasses or shield their eyes from direct solar contact	1C	**Review:** See HPRC Safety Handbook for launch day general procedures (Appendix 9.4)
TF.18	Exposure to black powder	Premature ignition of black powder charges into personnel's face	Permanent or temporary blindness, eye irritation	4C	Personnel are required to wear safety glasses when black powder is present during assembly	3B	**Inspection:** See Launch Day Checklist Section 7.2 for safety precautions regarding contact with black powder and AVAB bulkheads
TF.19	Exposure to APCP combustion products	Premature ignition of black powder charger or the motor	Permanent or temporary blindness, eye irritation	4B	Personnel are required to wear safety glasses at the launch pad on launch day	3A	**Inspection:** See Launch Day Checklist Section 7.2 for required materials during launch pad procedures
Hazards to Ears							
TF.20	Exposure to loud noises	Motor ignition/burn	Eardrum damage, hearing loss	2D	Personel are the required distance away from the LV according to Tripoli/NAR safety codes and provided with ear plugs as needed	2A	**Inspection:** Tripoli/NAR Safety Codes (Tripoli Safety Code 13-17)
General Hazards to Health							
TF.21	Dehydration	Extended time at the launch field without drinking water	Muscle cramps, kidney damage, drop in blood volume, headache, dizziness	3C	Personnel are instructed to pack ample water, water is provided if necessary	2B	**Review:** See HPRC Safety Handbook for launch day general procedures (Appendix 9.4)
TS.22	Heat stroke	Personnel overheats due to prolonged exposure to high temperatures	Dehydration, organ damage, heart and kidney stress, nausea, headache, confusion	3C	Personnel provided with water and a tent is used during launch day activities	2B	**Inspection:** Review Launch Day Packing List for launch day general procedures (Appendix 9.1.2)
Hazards Encountered at STEM Engagement Event							
Hazards to Skin and Soft Tissues							
TS.1	Slips, trips, falls	**(1)** Uneven ground & distracted personnel **(2)** Cluttered work environment & material spills	Skin abrasion, bruising	2C	**(1)** Personnel are instructed to pay attention during estes/bottle/straw rocket launches and not run during recovery procedures **(2)** Instructors maintain a safe school environment	2A	**(1) Review:** See HPRC Safety Handbook for stem engagement guidelines (Appendix 9.4) **(2)** Individual school policy
TS.2	Cut with X-acto knife/ scissors	**(1)** Distracted personnel **(2)** Untrained use of equipment	Skin and soft tissue abrasion	3D	**(1)** Club members are kept on task by the outreach officer **(2)** X-acto knives and scissors are only provided to students who know how to use them	2B	**Review:** See HPRC Safety Handbook for estes rockets guidelines (Appendix 9.4)
TS.3	Allergic Reaction	**(1)** Personnel with outdoor allergies are exposed to wildlife/environment for prolonged periods of time **(2)** Accidental exposure to allergens	Runny nose, sinus pressure, mild allergic symptoms, swelling, rash, hives, anaphylaxis	3C	STEM engagement activity hosts keep record of students allergens	1B	Individual school policy

Table 7.4: Personnel Hazards

Label	Hazard	Cause	Effect	LS Pre-Mitigation	Mitigation	LS Post-Mitigation	Verification
TS.4	Estes rocket hits personnel	**(1)** Improper launch angle or launch setup **(2)** Inadequate safety perimeter	Skin abrasion, bruising	3B	**(1)** Estes rocket launch stand is angled away from spectators by greater than 5 degrees **(2)** Spectators are the required distance away from the rocket according to Tripoli/NAR safety codes	2A	**(1) Review:** See HPRC Safety Handbook for estes rockets guidelines (Appendix 9.4) **(2) Inspection:** Tripoli/NAR Safety Codes (Tripoli Safety Code 13-17)
TS.5	Water bottle rocket hits personnel	**(1)** Improper launch angle or launch setup **(2)** Inadequate safety perimeter **(3)** Water bottle rocket lands on personnel	Skin abrasion, bruising	3B	**(1)** Water bottle rocket launch stands are anchored to the ground with a stake to ensure it does not become angled towards spectators during launch **(2)** Spectators are required to be at least 25 feet away from the launch stand **(3)** Spectators are instructed to not try to catch the rockets	2A	**Review:** See HPRC Safety Handbook for water bottle rocket guidelines (Appendix 9.4)
TS.6	Super glue contact with skin	**(1)** Mishandling of super glue **(2)** Accidental skin contact	Rash, skin abrasion, skin irritation	2C	**(1)** Students are instructed on the proper use of super glue during the demonstration **(2)** Students are provided with tools to avoid contact of super glue with their skin	1B	**Review:** See HPRC Safety Handbook for stem engagement guidelines (Appendix 9.4)
Hazards to Bone and Joints							
TS.7	Slips, trips, falls	**(1)** Uneven ground & distracted personnel **(2)** Cluttered work environment & material spills	Bone break/fracture	2C	**(1)** Personnel are instructed to pay attention during estes/bottle/straw rocket launches and not run during recovery procedures **(2)** Instructors maintain a safe school environment	2A	**(1) Review:** See HPRC Safety Handbook for stem engagement guidelines (Appendix 9.4) **(2)** Individual school policy
TS.8	Model LV falls	**(1)** Improper assembly of model LV **(2)** Improper safety perimeter	Bone break/fracture	2B	**(1)** Model LV is assembled prior to student arrival and is secured with shear pins **(2)** Volunteers prevent students from interacting with model LV without supervision	1A	**Review:** See HPRC Safety Handbook for demonstration materials guidelines (Appendix 9.4)
Hazards to Head							
TS.9	Slips, trips, falls	**(1)** Uneven ground & distracted personnel **(2)** Cluttered work environment & material spills	Concussion, head wound, dizziness, headaches, drowsiness	2C	**(1)** Teachers and volunteers ensure clean floors and ample space prior to starting activity **(2)** Team members ensure material spills are cleaned and that the area is organized before use”	2A	**Inspection:** STEM engagement activity location
TS.10	Water bottle rocket hits personnel	**(1)** Improper launch angle or launch setup **(2)** Inadequate safety perimeter	Concussion, head wound, dizziness, headaches, drowsiness	3B	**(1)** Only team members trained by the Outreach Officer control launch setup and ensure proper launch angle **(2)** Team members inspect safety perimeter and ensure it is clear of personnel before launch	2A	**Review:** See HPRC Safety Handbook for water bottle rocket guidelines (Appendix 9.4)
TS.11	Flying Debri	**(1)** Over-pressurization of water bottle rocket **(2)** Improper LV assembly	Concussion, head wound, dizziness, headaches, drowsiness	3A	**(1)** Only team members trained by the designated Outreach Officer control launch set up and pressurization **(2)** Team members inspect student LV prior to launch	2A	**(1) Review:** See HPRC Safety Handbook for water bottle rocket guidelines (Appendix 9.4) **(2) Review:** See HPRC Safety Handbook for demonstration materials guidelines (Appendix 9.4)
TS.12	Model LV falls	**(1)** Improper assembly of model LV **(2)** Inadequate safety perimeter	Concussion, head wound, dizziness, headaches, drowsiness	2B	**(1)** Model LV is fastened together with rivets and shear pins, similar to how it would be constructed on launch day **(2)** Spectators are not allowed to touch the model rockets without assistance from club members	1A	**Review:** See HPRC Safety Handbook for demonstration materials guidelines (Appendix 9.4)
Hazards to Eyes							
TS.13	Eye trauma	Straw rocket is aimed towards personnel and hits a spectator’s eye	Temporary loss of sight, blurred vision, bruising	2B	Personnel are instructed to not launch straw rockets towards spectators	1A	**Review:** See HPRC Safety Handbook for straw rockets guidelines (Appendix 9.4) **Inspection:** Water bottle rocket stand design

Table 7.4: Personnel Hazards

Label	Hazard	Cause	Effect	LS Pre-Mitigation	Mitigation	LS Post-Mitigation	Verification
TS.14	Flying debri	Overpressurization of water bottle rocket	Water bottle rocket explodes on stand	3A	**(1)** Water bottle rocket is not pressurized over 80 psi **(2)** Water bottle rocket launch stand has an over-pressurization valve that is not blocked	2A	**Review:** See HPRC Safety Handbook for water bottle rocket guidelines (Appendix 9.4) **Inspection:** Water bottle rocket stand design
General Hazards to Health							
TS.15	Dehydration	Lack of water at STEM engagement event	Muscle cramps, kidney damage, drop in blood volume, headache, dizziness	2B	Personnel are instructed to pack water, water is provided if necessary	2A	**Review:** See HPRC Safety Handbook for general procedures at stem engagement events (Appendix 9.4)
TS.16	Heat stroke	Extreme exposure to warm temperatures	Dehydration, organ damage, heart and kidney stress, nausea, headache, confusion	2B	Personnel provided with water and a tent is used when allowable during outreach activities	2A	**Review:** See HPRC Safety Handbook for general procedures at stem engagement events (Appendix 9.4)
TS.17	Hypothermia	**(1)** Extreme exposure to cold temperatures **(2)** Personnel sprayed with water from water bottle rocket during assembly/ launch	Numbness, fatigue, confusion, frostbite	4A	**(1)** Personnel attending STEM engagement events are instructed to wear proper attire for the weather conditions. Time outside is minimized. **(2)** A string is used on the water bottle rocket stand to allow personnel to stand far away from the rocket during launch	2A	**(1) Review:** See HPRC Safety Handbook for general procedures at stem engagement events (Appendix 9.4) **(2) Review:** See HPRC Safety Handbook for water bottle rocket guidelines (Appendix 9.4)

7.4.2 Project Schedule Analysis

This FMEA and LS matrix analyzes hazards that could impact the project schedule. This includes issues such as travel, fatigue, lack of resources, and delays.

Table 7.5: Project Schedule Analysis

Label	Hazard	Cause	Effect	LS Pre-Mitigation	Mitigation	LS Post-Mitigation	Verification
Hazards to Project Schedule							
PS.1	Subsystem leads cannot travel to Huntsville	Interference of senior graduation with Huntsville trip	Reduced team performance at competition launch	1C	**(1)** Seniors arrive one day late to Huntsville. **(2)** Current subsystem leads train future subsystem leads to replace them at Huntsville.	1A	**(1)** Huntsville Roster indication of some team members arriving late **(2)** Back-up subsystem leads included on Huntsville Roster
PS.2	Inadequate Huntsville attendance	Incorrect completion of Gateway registration	Members cannot travel to Huntsville	3C	Attend Gateway registration help sessions	1B	Submitted Huntsville roster with all necessary personnel
PS.3	Fatigue and burnout	Heavy workload, long working hours	Increased risk of accidents, reduced focus, lower quality of work	3C	**(1)** Monitor workload **(2)** Limit procrastination **(3)** Plan group activities	2B	**(1)** Team lead divides workload for each milestone document. **(2)** Team lead sets soft deadlines (Table 8.50). **(3)** Group activities are held on NCSU mandated wellness days.
PS.4	Mental health stress	Unpredictable schedules, tight deadlines	Reduced productivity	3C	**(1)** Provide information about NCSU Mental Health resources in weekly General Body Meetings. **(2)** Develop comprehensive and detailed schedules	2B	**(1)** General Body Meeting Slide in Appendix 9.6 **(2)** See Section 8.5 for the full project timeline
PS.5	Reduced team coordination	Conflicting subsystem schedules	Miscommunication	3B	**(1)** When2meet.com to schedule group meetings outside of subsystem meetings. **(2)** Integration Lead attends all meetings and coordinates information via notes and messages.	2A	**(1)** Team meeting times have been implemented and have ensured that all necessary members attend **(2)** Notes are taken at all subsystem and integration meetings
PS.6	Dependency delays	Interconnected tasks, miscommunication, resource allocations	Timeline delays	3C	**(1)** Create detailed subsystem schedules with adequate buffer time **(2)** Integration lead keeps track of upcoming interconnected tasks	2B	**(1)** Subsystem timelines have been implemented resulting in completion of milestones **(2)** Notes are taken at all subsystem and integration meetings

7.4.3 Personnel Availability Analysis

This FMEA and LS matrix disucusses project risks and hazards that deal with personnel availability. It details the plan and mitigations strageies if certain team members are no longer able to fulfull their responsibilities.

Table 7.6: Personnel Availability Analysis

Label	Hazard	Cause	Effect	LS Pre-Mitigation	Mitigation	LS Post-Mitigation	Verification
Hazards to Personnel Availability							
PA.1	Team Lead becomes unavailable	Unforeseen circumstances	Project communication and coordination challenges	4B	Integration Lead takes over position	2B	N/A
PA.2	Integration Lead becomes unavailable	Unforseen circumstances	Decreased subsystem communication	4B	Team Lead takes over position	2B	N/A
PA.3	Structures Lead becomes unavailable	Unforeseen circumstances	Incomplete launch vehicle	4B	Recovery Lead takes over position	2B	N/A
PA.4	Recovery Lead becomes unavailable	Unforeseen circumstances	Incomplete recovery system	4B	Aerodynamics Lead takes over position	2B	N/A
PA.5	Aerodynamics Lead becomes unavailable	Unforeseen circumstances	Decreased apogee prediction accuracy, inefficient launch vehicle design	4B	Structures Lead takes over position	2B	N/A
PA.6	A Payload Lead becomes unavailable	Unforeseen circumstances	Incomplete payload design	4B	Other Payload Leads take over position	2B	N/A
PA.7	Treasurer becomes unavailable	Unforeseen circumstances	Decrease in project funding	2B	New Treasurer elected	1B	See club constitution in Appendix 9.3
PA.8	Safety Officer becomes unavailable	Unforeseen circumstances	Decrease in project safety	3B	New Safety Officer elected	2B	See club constitution in Appendix 9.3
PA.9	Outreach Lead becomes unavailable	Unforeseen circumstances	Decrease in STEM engagement activities	2B	New Outreach Lead elected	1B	See club constitution in Appendix 9.3
PA.10	Necessary members absent for NASA design review presentations	Scheduling conflicts	Incomplete presentation requirement	4B	Plan availability with scheduling software (when2meet.com)	2A	All club members have been present for all milestone presentations
PA.11	Necessary members absent for Huntsville launch	Scheduling conflicts, graduation ceremony	Decreased team productivity, failed launch criteria	4D	**(1)** Follow designations above for absent personnel **(2)** Train another member to take the absent member's place	2C	**(1)** See PA.1-PA.6 **(2)** Alternate members have been identified to replace necessary personnel at Huntsville
PA.12	Necessary members absent for milestone launch	Scheduling conflicts	Decreased team productivity and efficiency, failed launch criteria	2B	Follow designations above for absent personnel	1A	**(1)** See PA.1-PA.6 **(2)** Milestone launches have been completed with alternate personnel as needed

7.5 Failure Modes and Effects Analysis

Below is the LS matrix which the following FMEA tables are based on. As mentioned previously, hazards and failure modes are color-coded orange or red. The following tables will deal with the Launch Vehicle, payload, launch pad, and environment.

Out of 147 hazards analyzed, none resulted in failure modes (red or orange) after mitigation. 80 remained in low risk (very unlikely, unlikely), while 67 remained in medium risk (very unlikely, unlikely, likely).

Table 7.7: Risk Assessment Before Mitigation

		Level of Severity			
		1 Low Risk	2 Medium Risk	3 High Risk	4 Severe Risk
Likelihood of Occurrence	A Very Unlikely	0.00%	3.40%	5.44%	2.72%
	B Unlikely	2.72%	10.88%	16.33%	24.49%
	C Likely	1.36%	6.80%	8.16%	10.20%
	D Very Likely	0.68%	2.72%	4.08%	0.00%

Table 7.8: Risk Assessment After Mitigation

		Level of Severity			
		1 Low Risk	2 Medium Risk	3 High Risk	4 Severe Risk
Likelihood of Occurrence	A Very Unlikely	19.05%	27.89%	19.73%	14.97%
	B Unlikely	7.48%	4.76%	4.08%	0.00%
	C Likely	2.4%	0.00%	0.00%	0.00%
	D Very Likely	0.00%	0.00%	0.00%	0.00%

7.5.1 Launch Vehicle FMEA

This FMEA matrix analyzes hazards to the LV fin system, airframe, bulkheads, aerodynamics, and recovery system.

Table 7.9: Launch Vehicle Hazards

Label	Hazard	Cause	Effect	LS Pre-Mitigation	Mitigation	LS Post-Mitigation	Verification
Hazards to Fin System							
VF.1	Fin bracket breaks	**(1)** Fin flexing during flight **(2)** Landing impact force **(3)** Excessive heat from motor	Loss of fin, non-reusable LV	4B	**(1)** Design fin brackets to be rigid **(2)** Design fin brackets to survive drop tests for landing at the maximum kinetic energy of 75 ft-lbs **(3)** Design fin brackets to not contact the motor casing (Section 3.5.8).	1B	**(1) Inspection:** See Section 3.4.1 for final manufactured fin design **(2) Test:** See Section 8.1.9 for Fin Can impact test results **(3) Inspection:** See Section 3.5.9 for the manufactured RMFS design
VF.2	Fin fracture	**(1)** Impact force and impact angle **(2)** Damage during transport	Non-reusable LV	2B	**(1)** Design fin such that it passes impact testing at 75 ft-lbs (Section 8.1.9) **(2)** Pack extra fins and transport the LV safely	2A	**(1) Test:** See Section 8.1.9 for Fin Can impact test results **(2) Inspection:** See night before packing list (Appendix 9.1.2)

Table 7.9: Launch Vehicle Hazards

Label	Hazard	Cause	Effect	LS Pre-Mitigation	Mitigation	LS Post-Mitigation	Verification
VF.3	Separation of fin from LV	Stripped fastener connecting fin to RMFS	LV does not fly straight, inability to launch LV	3B	Do not over-tighten fasteners when installing fins into RMFS	1A	**Inspection:** See Launch Day Checklist Section 7.2 for fastener tightening procedures (Section 3 Fin Can Assembly)
VF.4	RMFS loses functionality	Motor CATO	Non-reusable LV, required reconstruction	4A	Inspect motor grains and motor casing prior to launch	2A	**Inspection:** See Launch Day Checklist Section 7.2 for motor inspection instructions (Section 5 Motor Assembly)
Hazards to Motor							
VM.1	Motor retainer failure	**(1)** Motor retainer attached incorrectly **(2)** Ejection charge too large	Motor ejection, failed recovery system	3A	**(1)** Motor retainer secured correctly **(2)** Ejection testing prior to every launch (RF.10, RF.22)	1A	**(1) Inspection:** See Section 3.3.10 for final motor retainer design and analysis **(1) Inspection:** See Launch Day Checklist Section 7.2 for motor retainer securing procedures (Section 6 Drogue Recovery Assembly) **(2) Review:** Requirement RF.10 & RF.22 Verification
VM.2	Cracks or voids in propellant grain	Manufacturer error	CATO	4B	Inspect motor grains before launch to determine if motor is viable to launch on	4A	**Inspection:** See Launch Day Checklist Section 7.2 for motor verification procedures (Section 5 & 6)
VM.3	Premature motor ignition	**(1)** Excessive heat exposure during handling **(2)** Contact with electrical connections	Injury to personnel/ LV, launch without a recovery system, expenditure of motor	4B	**(1)** Storage of motor in flame cabinet prior to launch, storage of motor in shade at launch field **(2)** Storage of motor in flame-proof explosive containment box	4A	**(1) Review:** HPRC Safety Handbook (Appendix 9.4) **(1) & (2) Inspection:** Launch Day Checklist Section 7.2 for motor storage location
VM.4	Thrust plate failure	Excessive compressive stresses during launch	RMFS destroyed, jettison of motor	4B	Conduct force analysis on the thrust plate and select materials with a 1.5 or greater factor of safety	3A	**Analysis:** FEA simulations were performed on the thrust plate in CDR and PDR documentation. The max value sustained was 1449.5 psi, resulting in a factor of safety of 11.39.
Hazards to Airframe							
VAF.1	Airframe cracking	**(1)** Hoop stress from internal pressure from ejection charges **(2)** Excessive landing force	Separation of RMFS from Fin Can, jettison of payload from LV, non-reusable LV, failed flight	3B	**(1)** Calculate black powder ejection charge size empirically (Section 3.6.5) **(2)** Size parachutes for a landing kinetic energy of less than 75 ft-lbf (Section 3.6.2)	1B	**(1) Inspection:** See Section 3.6.5 for black powder charge calculations **(2) Inspection:** See Section 3.7.6 for landing kinetic energy of each section and final recovery design
VAF.2	Airframe zippering	Excessive force from deployment of parachutes	Non-reusable LV, failed flight	3B	Use of airframe that can withstand parachute deployment forces	1B	**Inspection:** See Sections 3.3.7 and 3.3.4 for final airframe material selection **Analysis:** See Section 3.2.13 in the CDR report for force analysis on airframe **Inspection:** See Section 3.6.1 for final recovery system design
VAF.3	Stripped fastener	Excessive forces when installing RMFS during launch day construction	Separation of RMFS from LV	3A	Follow checklist procedures to not over-tighten fasteners during assembly	2A	**Inspection:** See Launch Day Checklist Section 7.2 about fastening procedures (Section 3 Fin Can Assembly)
VAF.4	High energy impact with the ground	Late/no parachute deployment	Airframe ruptures, cracks, breaks	3B	Parachute selection based on calculations of LV kinetic energy at landing	2A	**Inspection:** See Sections 3.6.1 and 3.7.6 for final recovery system design and kinetic energy calculations
VAF.5	Airframe exposed to flame/burning ejection charges	Excessive amount black powder used in ejection charge	Airframe disintegration/ rupture	2C	**(1)** Ejection charges are calculated and tested prior to launch **(2)** LV airframe constructed from flame-resistant fiberglass and blue tube	1A	**(1) Review:** Requirement RF.22 Verification **(2) Inspection:** See Section 3.5 for airframe material selection
VAF.6	Airframe exposed to motor exhaust gases	**(1)** Motor sealed incorrectly **(2)** CATO	Airframe rupture	2B	**(1)** Construct motor under the supervision of personnel possessing a L2 Certification or higher (Requirement LVS.11) **(2)** Inspect motor grains and motor casing prior to launch	2A	**(1) Review:** Requirement LVS.11 regarding motor assembly **(1) & (2) Inspection:** See Section 7.2 for Launch Day Checklist

Table 7.9: Launch Vehicle Hazards

Label	Hazard	Cause	Effect	LS Pre-Mitigation	Mitigation	LS Post-Mitigation	Verification
Hazards to Bulkheads							
VB.1	Avionics bulkhead detachment from AVAB	**(1)** Excessive forces from parachute deployment **(2)** Bulkhead secured to AVAB incorrectly	Recovery hardware detached in flight, recovery failure	4C	**(1)** Tensile testing of avionics bulkheads **(2)** Bulkhead material chosen according to force analysis **(3)** Bulkhead retained with four points of contact	4A	**(1) Test:** See Section 8.1.6 for avionics bulkhead test results **(2) Inspection:** See Section 3.5.5 for final avionics bulkhead material selection **(3) Inspection:** See Figure 3.81 for final avionics bulkhead design **(3) Inspection:** See Launch Day Checklist Section 7.2 for procedures detailing the correct attachment of AVAB bulkheads on launch day
VB.2	Nose Cone bulkhead detachment from Nose Cone	Excessive forces from main parachute deployment	Payload not safely retained in LV, failed flight	4C	**(1)** Tensile testing of Nose Cone bulkhead **(2)** Bulkhead material and security method chosen according to force analysis	4A	**(1) Test:** See Section 8.1.5 for Nose Cone tensile test result **(2) Inspection:** See Section 3.3.3 for final Nose Cone bulkhead design
VB.3	Avionics bulkhead crack	Excessive stress concentrations on bulkhead from parachute deployment	Disconnection of parachutes from LV, ballistic descent	3B	**(1)** Design bulkheads to be made of a material with no/little voids that could cause stress concentrations **(2)** Assemble bulkheads such there are minimal stress concentrations	3A	**(1) Inspection:** See Section 3.5.5 for final bulkhead material selection and design **(2) Inspection:** See Section 8.1.6 for results for stress analysis on avionics bulkheads **(3) Inspection:** See Launch Day Checklist Section 7.2 for assembly of bulkheads in the same configuration as analyzed
VB.4	Burns into bulkhead	**(1)** Excessive use of black powder in ejection charges **(2)** Black powder contained incorrectly	Bulkhead damage, bulkhead unable to withstand flight forces	2B	**(1)** Calculate size of ejection charges empirically **(2)** Test correct containment of black powder in blast caps after construction to ensure no leaks	1A	**(1) Inspection:** See Table 3.4 for ejection charge sizing **(1) Test:** See Section 8.1.13 for ejection testing results that confirm the correct amount of black powder **(2) Inspection:** See Launch Day Checklist Section 7.2 for confirmation of correct containment of black powder
VB.5	Centering ring deformation	CATO	Motor misalignment with the launch vehicle centerline	4B	Inspect motor grains and motor casing prior to launch	4A	**Inspection:** See Launch Day Checklist Section 7.2 regarding motor assembly
Hazards to Aerodynamics							
VA.1	Motor CATO	**(1)** Voids in motors **(2)** Cracks/deformation in motor casing	Failed launch, damaged airframe, damaged payload, damaged recovery system	4B	**(1)** Motor grains inspected prior to launch **(2)** Motor casing inspected for defects/inconsistencies during motor assembly	4A	**(1) & (2) Inspection:** See Launch Day Checklist Section 7.2 for motor grain inspection procedures
VA.2	LV is over-stable	CG is too far forward	Weathercocking	1C	**(1)** Vehicle CG location is measured prior to launch as a part of checklist **(2)** Vehicle is designed to include removable ballast in Fin Can and Nose Cone to correct stability as necessary	1B	**(1) Inspection:** See Launch Day Checklist Section 7.2 for CG measurement **(2) Inspection:** See Section 3.3.2 for removable ballast system and its implementation
VA.3	LV over/under expected weight	**(1)** Payload is overweight/underweight **(2)** Material mass differs from aerodynamic simulations **(3)** Too much/little ballast	LV fails to meet predicted apogee, LV fails to meet NASA apogee range, LV stability is too high/low, stability is not between 2 and 2.7, incorrect Air Brakes location	2C	**(1)** Integration Lead holds weekly LV and payload integration meetings **(2)** Team measures all material components and records results on a shared document **(3)** Vehicle is designed to include removable ballast in Fin Can and Nose Cone	2A	**(1) Inspection:** See Table 8.49for weekly meeting times **(2) Inspection:** See Tables 3.2 for all recorded LV and payload masses **(3) Inspection:** See Section 3.3.2 for removable ballast system
VA.4	Partial Air Brakes deployment	**(1)** Internal gear slippage **(2)** Broken fin/ internal gear	Unexpected pitching moment, loss of control	4B	**(1)** Design the air brakes such that the failure point is the servo, not the gears **(2)** Stress test fins/ internal gears	3A	**(1) Inspection:** See Section for air brakes design **(2) Test:** See Section 8.2.13 for air brakes deployment test results
VA.5	Mid-flight instability	Air move CP aft of CG	Loss of control, deviation from intended trajectory	4C	Design the launch vehicle such that the burnout CG is forward of the air brakes	4A	**Inspection:** See Figure 8.1 for air brakes center and gravity analysis

Table 7.9: Launch Vehicle Hazards

Label	Hazard	Cause	Effect	LS Pre-Mitigation	Mitigation	LS Post-Mitigation	Verification
Hazards to/from Recovery System							
VR.1	Nomex detaches from parachute	**(1)** Rips/tears in nomex **(2)** Breakage in nomex connection **(3)** Incorrect attachment of nomex to shock cord	Parachute catches on fire, permanent loss of nomex and/or parachute	3B	**(1)** Nomex is inspected prior to launch vehicle assembly for rips, tears, and inconsistencies. **(2)** Nomex is connected to shock cord with threaded quick links of sufficient strength. **(3)** Launch day checklist is followed instructing proper connection of nomex to parachute.	2A	**(1) Test:** See Section 8.1.10 for altimeter testing results **(2) Inspection:** See Section 3.6.3 for shock cord sizing calculations **(3) Inspection:** See night before checklist about checklist shock cord knots (Appendix 9.1.2)
VR.2	Parachute detaches from launch vehicle	**(1)** Shroud lines tear **(2)** Quick-link fails during flight **(3)** Shock cord fails during flight **(4)** Bulkhead fails during flight **(5)** Incorrect assembly of recovery system	LV kinetic energy is over 75 ft-lbs. at touchdown, ballistic landing of LV, damage to LV body	3D	**(1)** Parachute and shroud lines are inspected for thinning, tears, and knots prior to launch vehicle assembly. **(2)** Threaded quick-link attached to parachute is secured with tape.	3B	**(1) & (2) Inspection:** See Launch Day Checklist Section 7.2 for recovery assembly procedures and confirmations
VR.3	Main parachute deploys at apogee	**(1)** Drag separation of Main Parachute Bay **(2)** Main ejection charge at apogee due to altimeter failure **(3)** Ematches are wired to the wrong blast cpas	LV potentially lands in an inaccessible area, potential loss of LV and Payload, failure to meet drift distance requirements	2B	**(1)** 4-40 shear pins are used and shear tested **(2)** Altimeter testing is performed prior to launch day. **(3)** E-match wiring is checked during assembly on launch day.	1A	**(1) Inspection:** See Section 3.6.1 for final recovery system design **(2) Test:** See Section 8.1.10 for altimeter testing results **(3) Inspection:** See Launch Day Checklist Section 7.2
VR.4	No/ partial parachute deployment	**(1)** Insufficient separation charges **(2)** Uncharged altimeter batteries **(3)** Shear pins don't break **(4)** Rubber bands aren't removed from parachute during assembly **(5)** Parachutes are folded incorrectly **(6)** Parachute stuck in LV	Ballistic descent, kinetic energy requirement failure, destruction of LV, destruction of electronics, launch failure	4C	**(1)** Black powder calculations are made according to RF.9. Calculations are verified with an ejection test prior to launch day. **(2)** Altimeters are powered with batteries whose voltage is verified with a multimeter prior to AV assembly. **(3)** 4-40 shear pins are used whose strength is verified with shear testing. **(4)** Rubber bands are confirmed to be removed from parachutes during assembly **(5)** Parachutes are confirmed to be folded according to mentor and manufacturer recommendations **(6)** Parachute deployment verified during dry run.	4A	**(1) Test:** See Section 8.1.13 for ejection testing procedure. **(2) Inspection:** See Launch Day Checklist Section 7.2 for battery power confirmations **(2) Test:** See Section 8.2.16 for avionics battery test results. **(3) Test:** See Section 8.1.8 for shear pin testing results. **(4) Inspection:** See Launch Day Checklist Section 7.2 for rubber band removal confirmation. **(5) Inspection:** See Launch Day Checklist Section 7.2 for parachute folding confirmation. **(6) Test:** See Section 8.1.14 for dry run test results.
VR.5	Shock cord rip/tear	**(1)** Late parachute deployment **(2)** Excessive force on shock cord **(3)** Incorrect attachment loops/ knots	Ballistic descent of LV, destruction of LV, destruction of electronics, launch failure	4B	**(1)** Altimeters are tested prior to launch day. **(2)** Shock cords are sized according to Section 3.6.3 with sufficient factor of safety to accommodate expected parachute deployment forces. **(3)** Self tightening knots are used and checked prior to launch day.	1B	**(1) Test:** See Section 8.1.10 for altimeter testing results **(2) Inspection:** See Section 3.6.3 for shock cord sizing calculations **(3) Inspection:** See night before checklist about checklist shock cord knots (Appendix 9.1.2)
VR.6	LV sections collide	**(1)** Insufficient length of shock cord **(2)** Shock cord entanglement	Damage to LV due to mid-air collision or increased landing velocity	2C	Allotted more than 5 ft of separation between falling sections under each parachute	1B	**Inspection:** See Section 3.6.1 for final recovery system design
VR.7	Late section separation	**(1)** Incorrect timing of black powder detonation **(2)** Altimeters do not work as intended	Ballistic landing, excessive force on shock cord connections and shock cord, launch failure	4B	**(1)** Recovery altimeters are confirmed to be programmed correctly and are tested prior to launch day **(2)** Altimeters are confirmed to be working correctly during launch day assembly	4A	**(1) Test:** See Section 8.1.10 for altimeter testing results **(1) Review:** Requirement RF.22 verification **(2) Inspection:** See Launch Day Checklist Section 7.2 for confirmation of altimeter continuity

Table 7.9: Launch Vehicle Hazards

Label	Hazard	Cause	Effect	LS Pre-Mitigation	Mitigation	LS Post-Mitigation	Verification
VR.8	Shock cord tangled during deployment	Shock cord is not packed appropriately	Parachute is partially deployed, LV fails kinetic energy landing requirement	3D	Shock cords are z-folded and secured with rubber bands prior to launch vehicle integration	2B	**Inspection:** See Launch Day Checklist Section 7.2 for shock cord folding procedures
VR.9	Altimeter pressure reading malfunction	Improper sizing of pressure port holes	Parachutes are deployed at incorrect times, ballistic landing, damage to shock cord/ bulkheads	3C	Pressure port holes are sized appropriately	3A	**Inspection:** See Section 3.5 for final launch vehicle construction
VR.10	Damage to nomex or deployment bag during ejection testing	Incorrect placement of nomex in parachute bay during ejection testing	Required use of an alternate, less ideal, nomex	3B	Do not place nomex or deployment bag directly on top of blast caps.	3A	**Inspection:** See Launch Day Checklist Section 7.2 regarding parachute assembly
VR.11	Damage to main parachute during ejection testing	Improper use of deployment bag during ejection testing	Required use of a main parachute that will not meet descent time requirements, purchase of a replacement main parachute	2B	Pack main parachute in deployment bag according to mentor and manufacturer recommendations.	2A	**Inspection:** See Launch Day Checklist Section 7.2 regarding main parachute packing
VR.12	Damage to drogue parachute during ejection testing	Improper use of nomex during ejection testing	Required use of a different drogue parachute, purchase of a replacement drogue parachute	3B	Pack drogue parachute in nomex such that there are no gaps between the nomex and parachute.	3A	**Inspection:** See Launch Day Checklist Section 7.2 regarding drogue parachute packing
VR.13	Damage to wire connectors	Pinched or caught wires during launch day assembly assembly, dry run, or packing	Required wire/ connector replacement on launch day	1C	Include precautions during assembly to prevent pinched wires	1B	**Inspection:** See precautions listed in Launch Day Checklist Section 7.2
VR.14	Damage to ejection charges	AVAB bulkheads dropped/ mishandled during assembly and transport	Required repacking of ejection charges	2B	Bulkheads are kept in the energetics box prior to use	1A	**Inspection:** See Launch Day Checklist Section 7.2 required materials and location
VR.15	Premature ejection charge detonation	Accidental excitation of e-matches	Required repacking of ejection charges, personnel harm, LV harm	3B	Keep ejection charges disconnected from power sources until launch pad	2A	**Inspection:** See Launch Day Checklist Section 7.2 about use of pull pin switches
VR.16	Altimeter malfunction	Transmitter interference	Premature/ late deployment of parachutes	4B	**(1)** Design the avionics system to keep the GPS, payload, and servos far away from the altimeters **(2)** Shield the avionics from the GPS	3A	**Inspection:** See Section 3.6.6 for final avionics system and AVAB sled design

7.5.2 Payload FMEA

This FMEA matrix analyzes hazards to transmitters, receivers, wiring connections, payload electronics, payload structure, payload software, and the Air Brake system.

Table 7.10: Payload Hazards

Label	Hazard	Cause	Effect	LS Pre-Mitigation	Mitigation	LS Post-Mitigation	Verification
Hazards to Transmitters							
PT.1	Transmission failure	**(1)** Landscape interferes with transmission **(2)** Error in code **(3)** Electronics interfere with transmission **(4)** Incompatible antenna orientation **(5)** Out of range to transmit	NASA doesn't receive collected data points	4B	**(1)** VV&T on payload system to ensure transmission design is resistant to minor landscape interferences that may occur at the launch field (people, tents, trees, etc.) **(2)** Test transmission code prior to launch day **(3)** Shield antenna from other electronics, test transmission set-up prior to launch day **(4)** Test transmission at different antenna orientations **(5)** Test transmission at maximum drift distance	4A	**(1) Test:** See Sections 8.2.4 and 8.2.2 for payload transmission test results **(2) Test:** See Section 8.2.4 for transmission code test results **(3) Inspection:** See Section 4.3 for final payload design **(3) Test:** See Sections 8.2.4 and 8.2.2 for transmission set-up test results **(4) Test:** See Section 8.2.7 for antenna polarization test results **(5) Test:** See Section 8.2.6 for transmission range test
PT.2	Overlap of transmission with another team	**(1)** Data is transmitted on the wrong frequency **(2)** Faulty transmitter	NASA doesn't receive collected data point	2A	**(1)** Develop code to have transmission frequency as an input variable. Frequency assigned by NASA on launch day will then be entered correctly **(2)** Test transmitter prior to launch	1A	**(1) Inspection:** See Section 4.5 for payload code **(2) Test:** See Section 8.2.4 for payload data transmission test results
PT.3	Early transmission	Software detects landing at wrong time	Payload challenge fails, failure to meet NASA Requirement 4.2.6.1.	4B	Robust state based model to detect landing	4A	**Inspection:** See Section 4.3.3 for state based model design
PT.4	Transmission exceeds allotted time	**(1)** Error in software code **(2)** Push to talk stays on due to damaged hardware	Failure to adhere to NASA requirements	4B	**(1)** A hard-coded stop time is included in software code as a backup to timer stop. **(2)** Manual shut-off with XBee **(3)** Test transmission prior to launch	4A	**(1) Inspection:** See Section 4.3.3 for hard-coded stop time software **(2) Test:** See Section 8.2.3 for X-Bee signal reception test results **(3) Test:** See Section 6.3 for PDF results
PT.5	Flight computer disconnection	**(1)** Flight forces **(2)** Accidental detachment during assembly	Payload data collection and transmission failure	4C	**(1)** Test flight computers under anticipated flight forces prior to launch **(2)** Ensure proper connections on launch day with checklist, adhere to Team Derived Requirement PF.8	4A	**(1) Inspection:** See Section 6.3 for results of Payload Demonstration Flight **(2) Inspection:** See Launch Day Checklist Section 7.2 for connection verification **(2) Review:** Requirement PF.8 Verification
PT.6	Sensor disconnection	**(1)** Flight forces **(2)** Accidental detachment during assembly	Payload data collection failure	3C	**(1)** Test sensors under anticipated flight forces prior to launch **(2)** Ensure proper connections on launch day with checklist, adhere to Team Derived Requirement PF.8	3A	**(1) Inspection:** See Section 6.3 for results of Payload Demonstration Flight **(2) Inspection:** See Launch Day Checklist Section 7.2 for payload connection verification **(2) Review:** Requirement PF.8 Verification
PT.7	Data formatted improperly	Overwriting direwolf.conf file	Failure to adhere to NASA specifications	1B	**(1)** Verify expected data format **(2)** Perform test transmissions using the desired data format prior to launch day	1A	**(1) & (2) Inspection:** See Sections 8.2.4 and 8.2.2 for payload data transmission test results
Hazards to Receivers							
PR.1	Mismatched XBee transmission and receiving frequencies	Improper frequency/ channel setup	Payload unable to receive manual shut off signal	1B	**(1)** Verify correct frequency **(2)** Test receiver on specified channel prior to launch	1A	**(1) & (2) Test:** See Section 4.3.3 for fail-safe activation test results
PR.2	Transmission goes over allotted time	Improper XBee configuration	Failure to adhere to NASA requirements	3A	**(1)** Ensure automatic transmission shutoff software is tested **(2)** Ensure XBee manual shutoff is configured to receive signal	1A	**(1) Test:** See Section 8.2.3 for remote override test results **(2) Test:** See Section 8.2.9 for remote override range test results

Table 7.10: Payload Hazards

Label	Hazard	Cause	Effect	LS Pre-Mitigation	Mitigation	LS Post-Mitigation	Verification
PR.3	Transmission has excess noise	**(1)** Loose connection between XBee and Py **(2)** Hardware interference	Inability of payload to receive override commands	2C	**(1)** Test XBee in payload bay prior to launch **(2)** Test transmission systems for interference prior to launch day	1A	(1) & (2) Test: See Section 8.2.3 for payload remote override test results. See Section 7.2 for the Full-scale Launch Day Checklist that includes connection confirmation prior to launch
Hazards to Wiring Connections							
PW.1	Wire disconnection	**(1)** Wires improperly secured **(2)** Soldering disconnection	Lack of communication between components	3C	**(1)** Include a checklist item to ensure wires are secured **(2)** Adhere to Team Derived Requirement PF.8	2A	**(1) Inspection:** See Launch Day Checklist Section 2 (Section 7.2) payload connection verification **(2) Review:** Requirement PF.8 Verification
PW.2	Data not collected	Excessive forces in launch/ preparation	Pin headers disconnected from sensors	3C	**(1)** Ensure proper connections on launch day with checklist **(2)** Adhere to Team Derived Requirement PF.8	3A	(1) **Inspection:** Launch Day Checklist Section 2 (Section 7.2) **(2) Review:** Requirement PF.8 Verification
PW.3	Data not communicated	Excessive forces in launch/ preparation	**(1)** Pin headers disconnected from ESP32 **(2)** MicroUSB cable disconnected from flight computer	4B	Ensure proper connections on launch day with checklist	4A	**Inspection:** See Launch Day Checklist Section 2 (Section 7.2) for payload connection verification
Hazards to Payload Electronics							
PE.1	Sensor failure	Defective sensor reports incorrect data	Loss of critical data	2B	Sensors tested under launch conditions prior to flight and after previous flights	1A	**Inspection:** See Section 6.3 for results of Payload Demonstration Flight **Test:** See Section 8.2.1 for sensor data verification test
PE.2	Voltage regulator failure	**(1)** Loose battery connection **(2)** Landing or flight forces	Electronics lose power	4B	**(1)** Ensure proper connections and solder joints connected to the Voltage regulator **(2)** Test connections after simulated impact	4A	**(1) Review:** Requirement PF.8 Verification **(2) Test:** See Section 8.2.11 for payload impact test results
PE.3	Damage to Raspberry Pi	Voltage regulator failure	Under-voltage resulting in Pi failing to stay powered (which powers other electronics), over-voltage resulting in damage to the board	3B	**(1)** Verify configuration of voltage regulator prior to launch **(2)** Ensure working solder connections	3A	**(1) & (2)** Inspection: See Launch Day Checklist Section 2 (Section 7.2) for payload connection verification
PE.4	Electronics not receiving sufficient power	**(1)** Batteries undercharged **(2)** Batteries lose power	Electronics fail to work properly	3B	**(1)** Check battery power is within specification in checklist prior to launch **(1) & (2)** Bring spare batteries **(2)** Test lifespan of payload batteries prior to launch	3A	**(1) Inspection:** See Launch Day Checklist Section 2 (Section 7.2) for payload battery checks **(1) & (2) Inspection:** Launch Day packing list (Appendix 9.1.2) **(2) Test:** See Section 8.2.5 for power supply verification test results
PE.5	Inability to capture video data	Camera runs out of available storage	Loss of video confirmation of Air Brakes	1B	Test the available storage of the camera prior to launch	1A	**Test:** See Section 8.2.12 for camera logging endurance test results
Hazards to Air Brakes							
PA.1	Air Brakes software failure	**(1)** IMU disconnection **(2)** Faulty software	Loss of apogee prediction/ control	3D	**(1)** Adhere to Team Derived Requirement PF.8 **(2)** Multiple unit tests	3B	**(1) Review:** Requirement PF.8 **(2)** Passed unit tests
PA.2	Air Brakes hardware failure	**(1)** Faulty manufacturing/ printing **(2)** Excessive aerodynamic forces during launch	Launch Vehicle instability, fin breakage, failure to deploy Air Brakes	4C	**(1)** Use high infill in 3D print **(2)** Test Air Brake deployment under flight forces	4A	**(1) Review:** Requirement PF.7 **(2) Test:** See Section 8.2.13 for Air Brake deployment test results
PA.3	Failed Air Brakes deployment/re-traction	**(1)** Friction in the Air Brakes mechanism **(2)** Inadequate servo strength **(3)** Incorrect assembly	Failure to reach target altitude	4C	**(1)** Reduce friction in mechanism **(2)** Verify servo deployment strength under highest aerodynamic loading **(3)** Assemble air brakes according to checklist, compliance with Team Derived Requirement PF.2	4A	**(1) Inspection:** See Section 5.5 for Air Brakes fin friction reduction methods **(2) Test:** See Section 8.2.13 for Air Brakes deployment test results **(3) Inspection:** See Launch Day Checklist Section 1 (Section 7.2) for air brakes assembly verification

Table 7.10: Payload Hazards

Label	Hazard	Cause	Effect	LS Pre-Mitigation	Mitigation	LS Post-Mitigation	Verification
PA.4	Significant deviation from target apogee	**(1)** Failure of air brakes to accurately predict target apogee **(2)** Failure of air brakes to reduce apogee by predicted amount	Reduction in altitude points	3C	**(1)** Test the accuracy of the WHJ control system using previous flight data prior to launch **(2)** Test the effectiveness of the air brakes to reduce apogee	2A	**(1) Test:** See Section 8.2.14 for air brakes flight simulation test results **(2) Test:** See Section 8.2.15 for air brakes effectiveness flight test results
PA.5	Air Brakes not receiving sufficient power	Batteries lose power	Inability of air brakes to function	3B	Test the lifespan of air brakes batteries prior to launch	3A	**Test:** See Section 8.2.16 for Air Brakes battery life test results
Hazards to Payload Structures							
PS.1	Structural failure of payload sled	In-flight/ landing forces, loss of permanent Nose Cone bulkhead	Damage to payload electronics	2B	**(1)** Ensure proper connection of payload electronics to capsule **(2)** Test connections under similar conditions to in flight forces	2A	**(1) Inspection:** See Launch Day Checklist Section 2 (Section 7.2) for electronics configuration verification **(1) Review:** Requirement PF.8 Verification **(2) Test:** See Section 8.2.11 for results of Nose Cone drop test results
PS.2	Permanent Nose Cone bulkhead failure	Recovery forces	Damage to stemnaut capsule/ stemnauts	2B	Structural analysis of the permanent Nose Cone bulkhead	2A	**Inspection:** See Figure 3.13 for permanent Nose Cone bulkhead design
PS.3	Removable Nose Cone bulkhead failure	Recovery forces	Accidental payload jettison	4B	Structural analysis of the removable Nose Cone bulkhead	4A	**Inspection:** See Figure 3.13 for removable Nose Cone bulkhead design
Hazards to Payload Software							
PO.1	Inaccurate or missing data is transmitted	**(1)** Payload computer fails to detect sensor failure **(2)** Payload computer fails to restart/reset the sensor connection **(3)** Data collection rate drops below 15 samples per second	Loss of critical mission data, incorrect data is transmitted to the NASA receiver, system operates with missing or incorrect sensor data	4C	**(1)** Optimize data processing efficiency and verify via VV&T **(2)** Implement backup sensors or software-based interpolation **(3)** Implement redundancy checks and verify via VV&T	3B	**(1)** The processing efficiency was found to be 123 Hz to 127 Hz for data collection. See Section 8.2.8 for the FUSE Data Collection Rate Test **(2) & (3)** Sensors are chosen to be redundant and have redundancy implemented in the code. See Section 8.2.1 for the Data Collection Flight Test.
PO.2	Unable to issue remote override	Payload is out of tested and viable connection range	Payload continuously transmits, payload failure, danger to other transmitting teams on launch day	3C	Ensure remote override capable distance is equivalent to max drift/recovery distance	2B	The payload can be remote overridden at distances up to 2088.9 feet. See Section 8.2.9 for the Remote Override Range Test.
PO.3	Faulty sensors are not detected	Improper software connection, faulty electronic manufacturing	Inaccurate or missing data is transmitted	3C	Add visual component to the payload design to verify sensor connection and add software to restart/reset the connection when failure is detected.	2B	The payload has a visual light that confirms sensor connection. If the sensors are failing to connect, the payload software sends a signal to reset/restart the sensor connection. See Section 8.2.1 for the Data Collection Flight Test.
PO.4	Transmitted data packet exceeds the APRS message limit	Faulty software code	Transmission fails or the packet is sent in fragmented pieces, reduced payload score	3B	The software structures the APRS message to have specific data points transmit in a repeatable order.	1A	The payload transmits the collected data points in a specific APRS format. See Section 4.3.1 for more details. This APRS message format was successfully tested in the Simulated Flight Transmission Test and the Data Transmission Verification Test (Section 8.2.2 and Section 8.2.4).

7.5.3 Integration FMEA

This FMEA matrix analyzes hazards to subsystem integration. This includes payload integration, Air Brake integration, LV component integration, and recovery equipment integration.

Table 7.11: Integration Hazards

Label	Hazard	Cause	Effect	LS Pre-Mitigation	Mitigation	LS Post-Mitigation	Verification
Hazards to System Integration							
IS.1	Recovery connection points for shock cord improperly sized	Calculation error, wrong parts are ordered	Quick links with attached shock cord cannot attach to bulkheads due to sizing error	4B	Sizes are verified by Integration Lead before purchases are made	2A	**Inspection:** See Section 3.6.1 and Figure 3.81 for recovery connection hardware **Inspection:** See Figures 3.79, 3.80, and 3.78 for assembled launch vehicle with recovery hardware
IS.2	Threaded rods for payload and avionics sleds improperly sized	Measurement miscommunication, unit conversion error	Sleds do not fit on threaded rods	3B	Sizes are verified by Integration Lead before purchases are made or sleds are printed. Sleds can be reprinted if necessary	2B	**Inspection:** See Section 3.5.5 for AVAB sled and Figure 4.8afor Payload sled integrated with threaded rods
IS.3	Payload doesn't fit in the Nose Cone	Miscommunication between subsystems, lack of test fitting	Payload cannot be included in LV, payload failure	4C	Sizes verified by Integration Lead before construction	3A	**Inspection:** See Section 5.3.1 for payload size and assembled integration into the Nose Cone
IS.4	Payload over designed weight	Miscommunication, improper calculations of weight	Stability margin outside of defined range of 2.0-2.7, apogee lower than predicted 4600 ft	3D	Measurements and calculations verified by Payload Leads and communicated to the Aerodynamics Lead	2A	**(1) Review:** Adherence to Requirement PD.14 for maximum payload size **(2) Inspection:** See Table 3.3 for resulting payload / Nose Cone mass **(2) Inspection:** The stability is 2.0. See Table 3.10 for launch vehicle stability
IS.5	Drogue recovery system doesn't fit	**(1)** Miscommunication in dimensions between subsystems **(2)** Lack of testing	Failed recovery system	4C	**(1)** Working dimensions document that is checked and updated weekly **(2)** Test fit recovery system and design the system to have additional breadth (LVF.3).	3B	**Inspection:** See Figure 3.78 for drogue recovery system design and integration
IS.6	Main recovery system doesn't fit	**(1)** Miscommunication in dimensions between subsystems **(2)** Lack of testing	Failed recovery system	4B	Test fit recovery system and design system to have an additional breadth	3A	**Inspection:** See Section 1.2.4 for main recovery system design and integration
IS.7	Inability to use Air Brakes to control launch apogee	**(1)** Incorrect tolerancing **(2)** Miscommunication in dimensions between subsystems	Air Brakes do not fit in LV	2D	Model Air Brakes and LV together in CAD to determine proper sizing	1B	**(1) & (2) Inspection:** See Section 5.7 for Air Brakes design and integration into the AVAB
IS.8	LV components do not connect properly	Misaligned marking/ measurements for fastening hole placement	Misalignment of holes for fasteners	3D	3D print alignment and marking devices before drilling	1A	**Review:** Adhere to Requirement LVF.7 about confirmation before cutting/drilling
IS.9	Improper LV assembly	Lack of knowledge, fatigue, stress, inadequate checklists	LV recovery failure, failure to launch	4B	Team Lead creates checklist for every launch that are followed and signed on launch day	2A	**Inspection:** See Section 7.2 for Launch Day Checklist. See Appendix 9.1.2 for implementation of Launch Day Checklist
IS.10	Improper recovery system assembly	Lack of knowledge, fatigue, stress, inadequate checklists	Parachutes do not deploy, parachutes collapse during flight	4C	Follow checklist for recovery procedures at every launch	2A	**Inspection:** See Launch Day Checklist Section 7.2
IS.11	Reduction in target apogee	Mass creep	Inability to use Air Brakes system to control apogee	2C	Weight components throughout the design process, regularly update mass sheet	2A	**Inspection:** See club schedule for weekly Senior Design Team meetings (Table 8.49)
IS.12	Limited payload space	Nose Cone shorter than anticipated	Redesign of payload sled/ components, change in center of pressure	1B	Verify the dimensions of the Nose Cone before ordering, redesign payload sled	1A	**Inspection:** See Section 3.3 for LV design

7.5.4 Launch Support Equipment FMEA

This FMEA matrix analyzes hazards related to launch support equipment. This includes, but is not limited to, ignitors, launch rails, launch pads, and assembly equipment.

Table 7.12: Launch Support Hazards

Label	Hazard	Cause	Effect	LS Pre-Mitigation	Mitigation	LS Post-Mitigation	Verification
Hazards to Launch Support Equipment							
SL.1	Shade tent flies away	**(1)** High winds **(2)** Improper anchoring to ground	Potential damage to cars or LV components, tent breaks, personnel sunburn	2D	**(1)** Launches will not be conducted in high winds **(2)** Use of stakes to keep tent grounded	1B	**(1) Inspection:** Tripoli/NAR Safety Codes (NAR Safety Code #9) **(2) Inspection:** Launch Day Packing List (Appendix 9.1.2)
SL.2	LV prematurely detaches from launch rail	Improper connection of rail button to LV	Rail button stripped out of launch vehicle on launch pad	3B	Rail button security tested during construction	2A	**Inspection:** See Section 3.3.7 for rail button placement. Inspection: See Launch Day Checklist Section 7.2 for launch pad procedures
SL.3	Motor doesn't ignite	**(1)** Ignitor is not in direct contact with motor grains **(2)** Bad ignitor	Ignitor fails to ignite motor	1D	**(1)** Igniters are installed under the guidance of NAR/TRA L3 personnel and secured to the launch rail **(2)** Redundant igniters brought to launch	1A	**(1) Inspection:** See Launch Day Checklist Section 7.2 for launch pad procedures **(2) Inspection:** Launch Day Packing List (Appendix 9.1.2) **(2) Inspection:** See Launch Day Checklist Section 5 Required Materials (Section 7.2)
SL.4	Damage to launch vehicle during launch day assembly	**(1)** High winds **(2)** Uneven landscape **(3)** Incorrect assembly	Table falls/collapses during LV construction, LV rolls off table	2C	**(1)** Launches will not be conducted in winds over 20 mph, **(2)** Team will set up tables for assembly on flat/even ground, team will use stands to prevent rolling **(3)** Team follows Launch Day Checklist to ensure proper assembly	2B	**(1) Inspection:** Tripoli/NAR Safety Codes (NAR Safety Code #9) **(2) Inspection:** Launch Day Packing List (Appendix 9.1.2) **(3) Inspection:** See Launch Day Checklist in Section 7.2
SL.5	Ignition system failure	Powering of ignition system insufficient/ wire shortage	Inability to launch	2A	Ignition system operated by NAR/TRA personnel	1A	The ignition system at the launch field is only operated by NAR/TRA personnel
SL.6	Rocket launched at an angle	Unstable launch rail	Decreased apogee, inability to use air brakes	2A	Set target apogee during demonstration flights such that air brakes will deploy regardless of launch angle	1A	**Inspection:** See Section 6.2 for analysis of VDF
SL.7	Launch rail is too short	Rocket sits taller than the launch rail on the launch pad	Unstable launch angle/trajectory, severe weather-cocking	2D	Bring a launch rail extender for every launch to make the rail height 12 feet	1A	**Inspection:** A launch rail extender is packed for every launch and utilized. See Appendix 9.1.2 for the launch day packing list
SL.8	Strong winds	High surface-level or upper-atmosphere winds	Unstable launch angle/trajectory, severe weather-cocking	3B	**(1)** Bring a portable anemometer to every launch and have team members frequently checking the wind speed **(2)** Don't launch in wind greater than 20 mph	1A	**Inspection:** An anemometer has been used at every launch and team does not launch in winds greater than 20 mph

7.5.5 Launch Operations FMEA

This FMEA matrix analyzes the hazards associated with launch day operations. This includes, but is not limited to, hazards associated with the FAA waver, motor issues, car troubles, and component collisions.

Table 7.13: Launch Day Operation Hazards

Label	Hazard	Cause	Effect	LS Pre-Mitigation	Mitigation	LS Post-Mitigation	Verification
Hazards to Launch Day Operations							
OL.1	Aircraft flies into FAA designated airspace	Pilot disobeys FAA guidance	All launches halted until aircraft exits airspace	4B	RSO is in contact with air traffic control	1A	**Inspection:** FAA flight waiver, Bayboro (NC) Launch Field, Dalzell (SC) Launch Field
OL.2	LV collides with personal or vehicle	Launch rail is not angled away from personnel	Injury to personnel, severe damage to vehicle	4B	RSO ensures launch rail is appropriately angled to avoid flights over spectators and vehicles	3A	**Inspection:** See Launch Day Checklist Section 8 for launch rail setting procedure (Section 7.2)

Table 7.13: Launch Day Operation Hazards

Label	Hazard	Cause	Effect	LS Pre-Mitigation	Mitigation	LS Post-Mitigation	Verification
OL.3	Ejection charges detonate prematurely	Short in wire connection	Injury to personnel, severe damage to vehicles or property	4B	Antistatic bags utilized during transportation of energetics	3A	**Inspection:** See Launch Day Packing Checklist in Appendix 9.1.2 for the location of energetics during transport
OL.4	Personnel harmed by motor ignition	Personnel or spectators close to LV flight	Injury to personnel or spectators	4C	Abide by Tripoli/NAR standards on distance from launch pad	3A	**Inspection:** Tripoli/NAR Safety Codes (Tripoli Safety Code 13-17)
OL.5	Black powder spills during assembly	**(1)** Rushed assembly **(2)** Improper technique	Improper detonation of ejection charges	3C	**(1)** Black powder assembly conducted prior to launch day **(2)** Checklist followed to prevent spillage of black powder for ejection charges	2B	**(1) & (2)** Inspection: See Night Before Checklist Section 2 & 3 in the Full-scale Launch Day Checklist for black powder assembly (Section 7.2)
OL.6	LV components accidentally left in lab	Components overlooked/ missed during packing	Missing necessary components for launch	4C	Follow prewritten packing list based on required materials	2A	**Inspection:** See Launch Day Packing List for all necessary components (Appendix 9.1.2)
OL.7	Motor detonates prematurely	**(1)** Sparks or open flame **(2)** Static discharge	Loss of motor	4C	Motor transported in a flame-proof explosive containment box and handled with care	3A	Inspection: Launch Day Packing List **Inspection:** See Launch Day Checklist required material location for motor assembly (Section 7.2)
OL.8	Car troubles	Vehicle transporting LV to launch field gets speeding ticket or breaks down	Inability to fly	2C	Team travels in convoy to launch field in order to provide assistance if necessary	2A	**Demonstration:** The team has traveled in a convoy for all launches, with additional cars that can transport the LV and other required material in the event another car is unable
OL.9	Bird strike	Flock of birds fly into LV flight path	Damage to and potential loss of LV	4B	RSO verifies that range and sky are clear before commencing with launch	2A	**Inspection:** Tripoli/NAR Safety Codes (NAR Safety Code #9)
OL.10	Personal stuck in inclement weather	Sudden change in weather while at launch field	Hazardous weather conditions	3A	Weather is monitored during launch day activities	1A	**Inspection:** Tripoli/NAR Safety Codes (NAR Safety Code #9)
OL.11	Lack of qualified personnel/ prefects to manage launch day operations	Unforeseen circumstances	Launch canceled/ delayed	4B	Team moves launch to another date/location, team uses backup launch	2A	**Inspection:** All launches complete and backup launches identified after FRR as necessary
OL.12	LV does not exit launch rail	Friction on launch rail	LV gets stuck on launch rail	4B	Lubricant for launch rail is packed and used if LV does not easily slide onto launch rail	3A	**Inspection:** See Launch Day Checklist and Required Materials (Section 7.2)

7.5.6 Environmental Hazard Analysis

This FMEA matrix analyzes the associated hazards to the local environment and the hazards that the environment might pose on the LV and other associated systems.

Our primary launch field is located in a humid subtropical climate (Bayboro, NC). This site includes farmland, pine flat, and wetland habitats. At the launch field the biological resources include terrestrial vegetation (crops, grasses, etc) and wildlife (burrowed animals, birds, bugs, etc). In this location, the major threats to the native vegetative community include invasive non-native species, wildfire, and human development. Additionally, this location includes a variety of habitats that provide for a wide diversity of terrestrial species (birds, mice, insects, rabbits, deer, etc). During launch day operations, our activities pose a threat to the wildfire and human development section of the local major threats. The following table demonstrates the identifications of these hazards and the mitigation strategies implemented. The team, in tandem with the local TRA Prefecture, works to ensure there is minimal impact to the natural environment at our launch site. All persons are required to keep the site clean of debris and trash, and to reduce the amount of travel into the launch field (farmland, crops).

The purpose of the table below is to ensure a safe environment for local personnel, local wildlife and vegetation, and the launch vehicle. A safe environment is one in which there is no, or optimally reduced, potential for death, serious bodily injury, illness, property damage, or contamination/litter. Various stressors in the environment can adversely affect human health and safety, along with local wildlife. Identification and control or elimination of these stressors can reduce risks to health and safety to acceptable levels of risk.

Table 7.14: Environmental Hazards

Label	Hazard	Cause	Effect	LS Pre-Mitigation	Mitigation	LS Post-Mitigation	Verification
Hazards From Vehicle to Environment							
Hazards to Land/Vegetation at Launch Sites							
VE.1	Fire on launch field	**(1)** Motor ignition **(2)** Premature ejection charge detonation **(3)** CATO	Tree/shrubbery damage, damage to farmland	4B	**(1)** Use of blast plates on launch rails provided by NAR/TRA **(2)** Altimeters aren't armed until launch pad **(3)** Ensure presence of fire extinguisher at launch field	3A	**(1) Inspection:** NAR Safety Code #7. All launch sites and high-powered rocket launches have utilized blast plates. **(2) Inspection:** See Launch Day Checklist Section 8 for altimeter arming procedures (Section 7.2) **(3) Inspection:** See Launch Day Checklist Section 9 Required Materials (Section 7.2)
VE.2	Compromised battery	**(1)** Battery punctured **(2)** Battery exposed to high temperature	Fire on launch field, hazmat leakage	3B	**(1)** Design electronics bays such that batteries are not close to sharp components **(2)** Electronics bay kept in battery bag prior to use	2A	**(1) Inspection:** See Sections 3.6.6 and 5.3.2 for AVAB design with protected/ secured batteries **(2) Inspection:** See Launch Day Packing Checklist (Appendix 9.1.2) battery locations
VE.3	LV lands in tree	**(1)** Main parachute deploys at apogee **(2)** Large drift distance	Tree damage/ death	4B	**(1)** Launch sites are selected by NAR/ TRA personnel to be free of trees within the expected drift distance **(2)** Maximum drift distance of launch vehicle does not have trees within range	2A	**(1) Review:** NASA Requirement 1.12 & NAR Safety Code #12 **(2) Review:** See Section 3.7.8 for maximum drift distance calculations
VE.4	Soil becomes contaminated from fiberglass, carbon fiber, or other contaminants	**(1)** CATO **(2)** Black powder is released at landing **(3)** HazMat littering	Soil is unusable, wildlife injury/death	4A	**(1)** See VA.1 Mitigation **(2)** See Requirement RS.8 **(3)** Trash Bags are brought to launch field	3A	**(1) Review:** VA.1 Mitigation **(2) Review:** Requirement RS.8 Verification **(3) Inspection:** See Launch Day Packing List for the packing of trash bags (Appendix 9.1.2)
VE.5	Hazmat deposit in irrigation ditch	**(1)** Battery explosion **(2)** Launch and energetics byproducts **(3)** Non-connected launch vehicle components	Toxins remain in food crops and could be consumed by humans or wildlife	3A	**(1)** Batteries are insulated and protected from impact **(2)** Launch pads are kept away from irrigation ditches and are cleaned after use **(3)** Utilized packing insulation is biodegradable (See Requirement RE.1)	2A	**(1) Review:** NASA Requirement 2.22 Verification **(2) Inspection:** Tripoli/NAR Safety Codes **(3) Review:** Requirement RE.1 Verification
VE.6	Littering of launch field	**(1)** Disconnection of parachutes/ Nomex **(2)** Disconnection of rubber bands from shock cord **(3)** Spillage of wadding	Environmental contamination	2C	**(1)** See VR.1 and VR.2 Mitigations **(2)** Adhere to Requirement RE.2 **(3)** Adhere to Requirement RE.1	1A	**(1) Review:** VR.1 and VR.2 Verifications **(2) Review:** Requirement RE.2 Verification **(2) Inspection:** See Launch Day Checklist Sections 4 % 6 about use of rubber bands (Section 7.2) **(3) Review:** Requirement RE.1 Verification
VE.7	High-energy impact of LV with ground	**(1)** Improper parachute sizing **(2)** No parachute deployment	Permanent ruts in launch field that lead to reduced crops	4B	**(1)** Adhere to Requirement RD.8 **(2)** Altimeter testing	3A	**(1) Inspection:** See Section 3.7.7 for parachute descent rate calculations **(1) Review:** Requirement RD.8 Verification **(2) Test:** See Section 8.1.10 for altimeter testing results
VE.8	Vegetation Damage	High-temperature exhaust gases from motor ignition and thrust	Scorching and burning of grass and crops near launch pad, soil sterilization due to heat, increased risk of wildfires	3B	Spray the ground near the LV on the launch pad with water to prevent fire and burning of the local ground	2A	**Demonstration:** The team sprays the ground on the launch pad with wire during hot and dry days (increased fire warnings). Additionally, a fire extinguisher is carried in the launch pad safety box (Appendix 9.1.2).
Hazards to Air/Water at Launch Sites							
VE.9	Microplastic emission	Excessive use of single-use plastics in LV design	**(1)** Microplastics are released into local watershed **(2)** Wildlife bodily harm/death	3A	LV design minimizes use of single-use plastics	1A	**Inspection:** See Section 3.3 for LV design with limited use of plastics outside of 3D printing
VE.10	Chemical off-gassing	Motor ignition, CATO	Air pollution	3B	AeroTech motors are selected for their high safety factor and chemical composition	2A	**Inspection:** See Section 1.2.2 for motor selection

Table 7.14: Environmental Hazards

Label	Hazard	Cause	Effect	LS Pre-Mitigation	Mitigation	LS Post-Mitigation	Verification
VE.11	Emission of smoke	**(1)** CATO **(2)** Ejection charge detonation **(3)** Fire on launch field	Air pollution	2C	**(1)** Only AeroTech motors due to their high performance statistics **(2)** Ejection charges are sized empirically for sufficient separation **(3)** See VE.1 Mitigation	1C	**(1) Inspection:** See Section 1.2.2 for motor selection **(2) Inspection:** See Section 3.6.5 for ejection charge sizing calculations **(3) Review:** Requirement VE.1 Verification
VE.12	Greenhouse gas emissions	**(1)** Transportation to/from launch field and Huntsville **(2)** Combustion by-products	Air pollution, contribution to global warming	2C	**(1)** Team carpools to and from launch sites **(2)** Level 2 AeroTech motors produce minimal greenhouse gasses	1C	**(1) Inspection:** HPRC Safety Handbook (Appendix 9.4) **(2) Review:** NASA Requirement 2.12
VE.13	Creation of vaporized hydrochloric acid	APCP combustion byproduct comes into contact with water	Air pollution	3A	Level 2 AeroTech motors do produce enough by product to create hydrochloric acid	1A	**Review:** NASA Requirement 2.12
VE.14	Debri in irrigation ditches	**(1)** Insulation is blown into the water/ditch **(2)** Team member trash is improperly disposed of **(3)** LV waste is improperly disposed of	Water pollution, clogged irrigation ditch, soil contamination	3A	**(1)** Utilize biodegradable insulation that disintegrates with contact to water **(2) & (3)** Trash bags are marked and distributed across the Launch Day camp	2A	**(1)** Biodegradable insulation is the only/primary LV packing material. See the verification for RF.23 (Table 8.43). **(2) & (3)** Trash bags are purchased prior to launch day and are spread out amongst team members.
VE.15	Soil contamination	**(1)** Residual combustion products from motor ignition and landing impact **(2)** Litter	Potential harm to local vegetation.	4A	**(1)** Recovery system is designed to have minimal KE at landing (reduce impact damage) **(2)** Trash bags are marked and distributed across the Launch Day camp	3A	**(1)** The maximum KE sustained during recovery is 61.3 ft-lbf. See Table 3.13 for the KE at landing for each section of the rocket. **(2)** Trash bags are purchased prior to launch day and are spread out amongst team members
Hazards to Wildlife at Launch Sites							
VE.16	Fire on launch field	**(1)** Motor ignition **(2)** Premature ejection charge detonation **(3)** Battery explosion **(4)** CATO	Wildlife injury, habitat loss, crop damage, team member injury	4B	See VE.1 Mitigation	3A	**Review:** VE.1 Verification
VE.17	LV collides with birds in flight	Birds fly into cleared airspace	Wildlife injury or death	4A	RSO confirms that range and sky are clear before launch	3A	**Inspection:** Tripoli/NAR Safety Codes (NAR Safety Code #9)
VE.18	Wildlife consumes toxins	Solid or liquid waste littering at launch site	Wildlife injury or death	4B	**(1)** Littering by personnel is prohibited, team follows leave no trace principles **(2)** Trash Bags are brought to launch field	2A	**(1) Review:** HPRC Safety Handbook (Appendix 9.4) **(2) Inspection:** Launch Day Packing List in Appendix 9.1.2
VE.19	LV lands in tree	**(1)** Premature parachute deployment **(2)** Strong wind drift	Habitat loss, wildlife injury or death	2B	**(1)** Altimeters are tested to be working properly prior to launch **(2)** Maximum drift distance of launch vehicle does not have trees within range	1A	**(1) Test:** See altimeter testing results in Section 8.1.10 **(2) Inspection:** Tripoli/NAR Safety Codes (NAR Safety Code #10)
VE.20	Permanent jettison of Nomex sheet	**(1)** Rips and tears in Nomex **(2)** Breakage at Nomex connection	Contamination of wildlife food/water supply	3B	See VR.1 Mitigation	2A	**Review:** VR.1 Verification
VE.21	Parachute permanently jettisons	**(1)** Quick link isn't properly secured/connected to the LV **(2)** Tear in shroud lines or shock cord	LV descends above max KE, injuries local animal habitats, littering, shroud lines entangle with local animals (suffocation, etc)	3D	See VR.2 Mitigation	3B	**Review:** VR.2 Verification
VE.22	Motor CATO	**(1)** Voids in motors **(2)** Cracks/deformation in motor casing	Wildlife injury or death, contamination of wildlife food/water supply	4B	See VA.1 Mitigation	3A	**Review:** VA.1 Verification

Table 7.14: Environmental Hazards

Label	Hazard	Cause	Effect	LS Pre-Mitigation	Mitigation	LS Post-Mitigation	Verification
VE.23	Battery ejection	**(1)** Frayed wires on battery connection **(2)** Damaged battery connector **(3)** Poor battery retainment	Battery acid leakage onto launch field, high-energy impact of LV upon landing	3B	**(1)** Batteries inspected during assembly **(2)** Battery connection inspected during assembly **(3)** Battery securement tested during assembly	3A	**Inspection:** See Launch Day Checklist (Section 7.2) for battery security procedures
VE.24	Black powder in irrigation ditches	**(1)** Unblown black powder charges **(2)** Ballistic LV landing	Toxin consumption by wildlife	2B	**(1)** Check for unblown charges upon landing and dispose of them properly **(2)** Test altimeters/ parachutes	1B	**(1) Inspection:** Launch Day Checklist Section 9 (Section 7.2) **(2) Test:** Sections 8.1.10 and 8.1.12 for planned altimeter and parachute testing results
VE.25	Wildlife displacement	**(1)** Human activity **(2)** Loud noises **(3)** Debris presence at launch sites	Disruption of local animal habitats	2B	**(1)** Launch sites are determined by the RSO/local farmer and occur ill-frequently throughout the year **(2)** Team members are instructed to keep a reasonable volume throughout the entire day **(3)** Trash bags are marked and distributed across the launch day site	1B	**(1) Demonstration:** The club participates in as few launches as possible (maximum of 2 per month) to reduce wildlife disruption at the local launch site **(2) Demonstration:** Team members have been instructed to keep the volume at a normal (non-yelling) volume for the entire duration of the launch **(3) Inspection:** Trash bags are purchased prior to launch and distributed to team members
VE.26	Battery explosion	**(1)** Battery is punctured, leading to contact with moisture **(2)** Excessive heat (overheating)	Water contamination, fire on launch field, hazmat leakage into soil/water	3B	**(1)** Batteries are clearly marked and inspected prior to use **(2)** Batteries are secured to their respective sleds and isolated from moisture, abrasion, and heat	3A	**(1) Inspection:** All batteries (and LiPos) are marked and labeled. See the verification for NASA Req. 2.22. **(2) Inspection:** Payload, Air Brake, and Recovery batteries are secured to their respective sleds and are isolated from moisture/abrasion. The payload includes a fan to circulate air inside the payload capsule and the Air Brake and Recovery batteries utilize the pressure port hole for cooling.
VE.27	Emission of microplastics	Increased use of single use plastics in LV assembly	Wildlife choking/strangling, wildlife digestive issues, wildlife death/diseases, wildlife infertility	3B	**(1)** Team members at launch site use reusable containers for all food and personal items. **(2)** LV assembly limits the use of single-use plastics	2A	**(1) Demonstration:** Team members are instructed to bring reusable containers during the safety briefing prior to launch **(2) Inspection:** See Section 3.5 for LV manufacturing/assembly. All items brought to the launch field are located in reusable ziplock bags or tool-box containers. Trash bags are distributed among team-members for any single-use plastics.
Hazards From Environment							
Hazards to Launch Vehicle							
EV.1	Airframe exposed to water	**(1)** LV lands in water **(2)** Wet weather conditions **(3)** LV pulled into water by parachute	Airframe disintegration	2D	**(2)** Do not launch LV in rain **(3)** Do not launch LV in high wind, recover LV quickly and retain parachute	1C	**(2) Inspection:** Tripoli/ NAR safety procedures (NAR Safety Code #9) **(3) Inspection:** See Launch Day Checklist Section 9 (Section 7.2) for parachute containment procedures during field recovery
EV.2	Damage to launch vehicle at launch pad	**(1)** High winds at launch site **(2)** Uneven ground at launch pad	Launch rail falls over after LV is attached	2B	**(1)** Launches will not be conducted in winds over 20mph **(2)** Launch pad stability inspected prior to attaching LV to launch rail	2A	**(1) Inspection:** Tripoli/ NAR safety procedures (NAR Safety Code #9) **(2) Inspection:** See Launch Day Checklist Section 8 (Section 7.2) for inspection of launch pad security
EV.3	Damage to launch vehicle upon ascent	LV collides with birds/ aircraft	Damage to airframe, broken fins, unsuccessful flight	2A	Range safety officer ensures clear sky and range prior to launch	1A	**Inspection:** Tripoli/ NAR safety procedures (NAR Safety Code #9)

Table 7.14: Environmental Hazards

Label	Hazard	Cause	Effect	LS Pre-Mitigation	Mitigation	LS Post-Mitigation	Verification
EV.4	Damage to launch vehicle upon descent	LV sections collide under parachute	Broken fins, cracked airframe	3C	Selection of shock cord lengths such that sections don't collide	2B	**(1) Review:** Requirement RD.2 verification **(1) Inspection:** Section 3.6.3 for shock cord length calculations
EV.5	Damage to launch vehicle upon landing	**(1)** LV lands out of landing area **(2)** LV lands in parking lot	LV hits building/ car	2B	**(1)** Selection of parachutes such that LV lands within 2500 feet of launch pad under maximum wind **(2)** Angle launch rail 5 degrees away from spectators	2A	**(1) Review:** NASA Requirement 3.11 verification (1) Inspection: Section 3.7.8 for max drift distance **(2) Inspection:** Launch Day Checklist Section 8 & 9 (Section 7.2)
EV.6	Damage to launch vehicle after landing	LV dragged into irrigation ditch pipe	Cut in fin/ airframe	3C	**(1)** Retrieve LV in a timely manner **(2)** Collapse main parachute first during recovery procedures	3B	Inspection: See Launch Day Checklist Section 9 (Section 7.2) for parachute containment procedures
EV.7	LV lands in tree	Parachute deploys at apogee	LV is left behind in tree	4B	**(1)** Launch sites are selected by NAR/TRA personnel to be far from trees or other hazards **(2)** See VR.3 Mitigation	2A	**(1) Review:** NASA Requirement 1.12 **(2) Review:** VR.3 Mitigation
EV.8	LV catches on fire	Dry, hot launch site conditions	Ground catches on fire, animal displacement, crop damage, launch rail/ignitor damage	3B	During high fire warning days, team members spray the local field under the LV with water to prevent the grass/crops from catching on fire	2A	During the VDF launch in SC, the team sprayed water on the ground surrounding the LV and launch rail
EV.9	Strong winds	High surface-level or upper-atmosphere winds	LV instability during ascent, increased recovery system drift, increasing risk of loss or damage, decrease in launch pad stability	3C	A team member monitors the wind and frequently informs the Aerodynamics Lead and Team Lead. If the winds are over 20 mph the launch is postponed till lighter wind conditions	2A	A team member has monitored wind speed at all launches and the team has not launched in 20+ mph winds
Hazards to Payload							
EV.10	LiPo explosion	**(1)** Exposure to high temperature **(2)** Damage to LiPo	Compromised payload electronics/ avionics	4C	**(1)** Shade LV during assembly/ transfer to launch pad **(2)** Secure batteries in payload such that they are protected from potential damage	4A	**Inspection:** See Launch Day Checklist (Section 7.2) for payload battery security
EV.11	Thermal expansion/ contraction	Rapid heating/ cooling of structural and electrical components	3D printed payload structure compromised, damage to electronics	2B	**(1)** Shade LV during assembly **(2)** Use of heat resistant materials	2A	**(1) Inspection:** See Launch Day Packing List for tent (Appendix 9.1.2) **(2) Inspection:** See Section 4.5 for final payload material selection
EV.12	Payload contact with water	Payload lands in/ is dragged into water on the launch field	Electronics waterlogged/ damaged	3A	**(1)** Recover payload in a timely manner to avoid contact with water **(2)** Shield payload electronics from the external environment	2A	**(1) Inspection:** Launch Day Checklist (Section 7.2) **(2) Inspection:** See Section 4.5.1 for payload design including shielding from the environment in the Nose Cone
EV.13	Transmission failure after landing	Landscape interferes with transmission	NASA doesn't receive collected data points	4B	Testing on payload system to ensure transmission design is resistant to minor landscape interferences that may occur at the launch field (people, tents, trees, etc.)	4A	**Test:** See Sections 8.2.6, 8.2.2, and 8.2.4 for payload transmission testing results
EV.14	Battery charge depletion	High temperatures outside on launch day	Payload does not function	3C	Test payload batteries in similar conditions to launch day	3A	**Test:** Sections 8.2.16 and 8.2.5 for payload battery test results
EV.15	Electromagnetic interference	Interference from communication towers	Payload transmission interference, GPS interference	2B	**(1)** Fly only in RSO and FAA cleared launch fields **(2)** Transmit over a specific (non-general) frequency for payload and GPS	2A	**(1) Inspection:** The team flies only in air-space cleared by the FAA and at launch fields maintained by an RSO **(2) Inspection:** The GPS uses the 920.75 MHz frequency and the payload uses 144.39 MHz, 920-928 MHz to encode their transmission
Hazards to Mission Success							
EV.16	Damp propellant grains	**(1)** High humidity **(2)** Sudden rainfall	No motor ignition, motor failure	4B	Launches are not conducted in inclement weather and weather is monitored	4A	**Inspection:** Tripoli/NAR Safety Codes (NAR Safety Code #9)

Table 7.14: Environmental Hazards

Label	Hazard	Cause	Effect	LS Pre-Mitigation	Mitigation	LS Post-Mitigation	Verification
EV.17	Damp black powder	**(1)** High humidity **(2)** Sudden rainfall	No black powder detonation, unblown black powder charges	4B	Launches are not conducted in inclement weather and weather is monitored	4A	**Inspection:** Tripoli/NAR Safety Codes (NAR Safety Code #9)
EV.18	Strong winds / high-altitude winds	Rapid changes in wind velocity at different altitudes	LV deviates from planned trajectory (apogee), increased aerodynamic loading, unstable flight characteristics	4B	Wind speed is monitored on ground and via weather tracking apps, LV is not launched above tested/simulated conditions (20 mph)	2A	**Demonstration:** A team member has monitored wind speed at all launches and the team has not launched in 20+ mph winds (NAR Safety Code #9)

7.6 Project Risks FMEA

This section and FMEA table identifies hazards to the overall goals of the NC State HPRC competition team. It identifies issues that could result in reduced documentation scores, the inability to assemble a functioning LV, and the impact of reduced funding.

Table 7.15: Project Risks

Label	Risk	Effect	Likelihood	Impact	Mitigation	Quantified Impact of Mitigation	Status
Time Risks							
TR.1	Incomplete/ rushed PDR, CDR, FRR, PLAR	Reduced scores on documentation	Medium	High	Soft deadlines 1 week before due date. Check in points throughout project development.	A 1 week soft deadline allows the project management team to review the entire document after it's written.	Soft deadlines have been met and useful in correcting mistakes
TR.2	Delayed arrival of subscale components	Failure to construct subscale launch vehicle on time	Medium	High	Order components in September for November launch	Mitigation reduces need for backup launch dates. If not followed, a 2 week delay in component delivery would result in the use of a backup subscale launch date.	The subscale launch vehicle was constructed and launched prior to CDR deadline
TR.3	Delayed arrival of full-scale components	Failure to construct full-scale launch vehicle on time	Low	High	Order components in December for February launch	Mitigation reduces need for backup launch dates. If not followed, VDF will be pushed very closed to the deadline.	The full-scale launch vehicle was constructed and launched prior to FRR deadline
TR.4	Subscale construction takes longer than anticipated	Failed subscale launch criterion	High	Medium	Schedule a 2 week buffer into subscale timeline.	A 2 week buffer allows time for launch vehicle mistakes to be corrected without using the backup subscale launch date.	The subscale launch vehicle construction took longer than anticipated but due to built-in buffers, it was still completed on time
TR.5	Full-scale construction takes longer than anticipated	Failed VDF	High	Medium	Schedule a 3 week buffer into full-scale timeline.	A 3 week buffer allows time for launch vehicle mistakes to be corrected without rescheduling VDF.	The full-scale launch vehicle construction took longer than anticipated but due to built-in buffers, it was still completed on time

Table 7.15: Project Risks

Label	Risk	Effect	Likelihood	Impact	Mitigation	Quantified Impact of Mitigation	Status
TR.6	Payload construction takes longer than anticipated	Failed PDF	Low	Medium	Schedule a 2 week buffer into payload construction timeline.	VDF and PDF do not occur on the same date before FRR deadline.	Payload construction has been completed significantly before FRR addendum deadline
TR.7	Rain on scheduled launches	Failed milestone	Medium	Low	Plan backup launch days, identify backup launch fields	Backup launch days allow the team to still complete the launch milestone with undesired weather conditions.	Back-up launch dates have been utilized to complete required launches on time
TR.8	Interference of finals with Huntsville trip	Individuals cannot attend the Huntsville launch	High	Low	Reschedule finals	Rescheduling finals at the earliest time possible allows members to attend Huntsville. This decreases the amount of time available to take final exams by 20%.	Adjustments have been made to allow all necessary personnel to attend the competition launch
TR.9	Failed ejection test	Failure to complete milestone launches	Medium	Medium	Plan to do ejection testing 2 weeks before PDF	Creates a 2 week buffer period to fix/update recovery system if required.	Ejection testing was successfully completed prior to each launch
TR.10	Failed payload testing	Payload challenge failure	Medium	Medium	Allow time for retesting by starting payload testing 2 weeks before PDF	According to timelines in Section 8.5, failed testing results in 2 weeks buffer to rebuild the payload between the verification testing and vehicle flight testing.	All payload testing was successfully completed before PDF
TR.11	Failed vehicle testing	Rebuild launch vehicle, failure to complete milestone launches	Low	Medium	Test components before verification flights of the launch vehicle	According to timelines in Section 8.5, failed testing results in 2 weeks buffer to rebuild the launch vehicle between the verification testing and vehicle flight testing.	All vehicle testing was successfully completed before VDF
TR.12	Failed subscale launch	Failure to complete milestone	Low	High	Re-fly at next launch, allow time for backup launches	Creates a buffer of 2 weeks.	Subscale demonstration flight was successfully completed before CDR
TR.13	Failed VDF	Failure to complete milestone	Low	High	Re-fly at next launch, allow time for backup launches	Re-fly on March 8th.	VDF was successfully completed before FRR on the second attempt

Table 7.15: Project Risks

Label	Risk	Effect	Likelihood	Impact	Mitigation	Quantified Impact of Mitigation	Status
TR.14	Failed PDF	Failure to complete milestone	Low	High	Re-fly at next launch, allow time for backup launches	Re-fly on March 8th.	PDF was successfully completed before FRR
Resource Risks							
RR.1	Motor shortage	Failure to complete milestone launches	Low	Medium	Use backup motors, purchase motors early	Backup motors are identified in PDR and will be used if necessary. Full-scale motors have been purchased.	All competition motors were ordered early to avoid motor shortage delays
RR.2	No launches in April at home launch field	Missed PDF	High	Medium	Plan to do PDF in March, use identified backup launch field	Delaying PDF allows more time for testing.	All launches have been completed before April. PDF was completed before FRR
RR.3	Machine shop closed	Cannot manufacture aluminum parts	Low	Medium	Schedule machining at times the machine shop is open, use alternate materials such as wood	Using wood in place of aluminum components for RMS and thrust plate (see Section 3.5) results in a significant decrease in strength and requires extra hardware connections.	All RMFS manufacturing occurred as planned
RR.4	Fiberglass shortage	Cannot use fiberglass material for full-scale launch vehicle	Low	Medium	Utilize blue tube for full-scale design	(1) Increases budget cost by at least $300 (2) Increases risk of water logging the rocket during field recovery and failing NASA Requirement 2.3.	Fiberglass manufacturer was changed from original supplier for faster delivery
Budget Risks							
BR.1	Any funding sources are eliminated entirely	Significant reduction in project budget	Low	High	Request funding from MAE department, contact funding source, request limited funding	Despite emergency funding, the team would lose approximately $800-$8,000 according to Table 8.47.	All funding sources have been acquired as expected
BR.2	SGov funding is reduced	Subscale launch vehicle construction is delayed/ compromised	Medium	High	Fill out SGov application for an appeal of the allocated funding amount	If 25% of funding is lost, this still results in a total of $398.	Funding was reduced but the impact was mitigated with Space Grant funding
BR.3	E Council funding is reduced	WolfWorks Experimental project funding is reduced/ compromised. Reduction in funding to SL competition project	Low	High	Fill out E Council funding sheet on time and prepare for the presentation necessary to request funding	Gain an additional $100-200 dollars from the appeal process	Funding was reduced but the impact was mitigated with Space Grant funding

Table 7.15: Project Risks

Label	Risk	Effect	Likelihood	Impact	Mitigation	Quantified Impact of Mitigation	Status
BR.4	Space Grant funding is reduced	Full-scale launch vehicle and payload development are compromised	Low	High	Rely on Student Government funding and include this information in the presentation for the next funding cycle	If 25% of funding is still lost this results in a loss of $1,250 per Table 8.47.	Space Grant funding was acquired as expected
BR.5	EYE funding is reduced	Team is not able to travel to Huntsville or the number of students who can attend the Huntsville launch is reduced	Low	High	Contact EYE and appeal for more funding. Allow only necessary personnel to travel to Huntsville.	If 25% of funding is still lost this results in a loss of $2,000 per Table 8.47.	All invited personnel were able to attend Huntsville
BR.6	ETF funding is reduced	Mentors funding is reduced and mentors cannot attend Huntsville launch	Low	High	Contact ETF and request additional funding, use mentor travel stipend from NASA, request that additional mentors pay for their own travel	If 25% of funding is still lost this results in a loss of $625 per Table 8.47.	ETF funding was acquired as expected
BR.7	High-Powered Rocketry Club credit card is declined or information is stolen	Cannot purchase items listed	Low	High	Replace card with new card, inform Wells Fargo of the stolen card immediately	Adds increased budget cost to replace card.	Credit card information has remained protected during the entirety of the project
BR.8	Receipt is not properly documented	Cannot receive payment from funding sources	Low	Medium	Attempt to locate receipt or request an online copy of the receipt, use money from club savings if necessary	Use other sources of funding, use club savings	Receipts have been properly documented as expected
BR.9	Member fails to pay for t-shirt	Overstock of club merchandise. Reduction in club funds for competition purposes.	Low	Low	Only give t-shirts to members after payment is received	Financial gain is stagnant.	T-shirts have been ordered and paid for appropriately
BR.10	Student steals/ takes money from club	Reduction in funding/ resources for club projects	Low	Medium	Remove student from the club, contact university code of conduct	Improves quality of team members.	No student has negatively impacted club funds during the entirely of the project
BR.11	Club does not register as a nonprofit	Cannot receive payment from funding sources, team fined	Low	High	Re-register club each year and fill out forms to submit to IRS	Adds approximately 30 minutes of paperwork.	N/A
BR.12	Missed deadline for funding	Delayed or reduced funding amount	Low	Medium	Contact funding source and explain situation, ask for late funding	Increases odds for at least some percentage of offered funding. Still would not result in the total amount requested.	Funding deadlines have not been missed due to proper documentation
Scope/Functionality Risks							
SFR.1	Limited drogue recovery space	Failure to complete subscale, VDF, and PDF milestone launches	Low	High	Change drogue packing arrangement	Redo ejection testing protocols and delays project by at least 1 day. Decreases the possibility of launching on time.	The drogue recovery system fits into the Launch Vehicle as expected

Table 7.15: Project Risks

Label	Risk	Effect	Likelihood	Impact	Mitigation	Quantified Impact of Mitigation	Status
SFR.2	Limited main recovery space	Failure to complete subscale, VDF, and PDF milestone launches	Low	Medium	Change main packing arrangement	Redo ejection testing protocols and delays project by at least 1 day. Decreases the possibility of launching on time.	The main recovery system fits into the Launch Vehicle as expected
SFR.3	Vehicle overweight/ underweight	Inaccurate apogee prediction	Medium	Medium	**(1)** Use Air Brakes to control apogee **(2)** Add/remove ballast to launch vehicle	**(1)** Need to update Air Brakes software **(2)** Increases time of launch day assembly	The Launch Vehicle is slightly overweight but not more than allowable due to mass analysis
SFR.4	Experimental payload complications	Loss of resources for payload challenge	Medium	High	Shift in resources away from experimental payload and toward competition payload	Results in loss of experimental payload (air brakes) and a less accurate apogee prediction	Air Brakes successfully worked as intended
SFR.5	Air Brakes fail approval from NASA SL management team	Loss of Air Brakes on full-scale launch vehicle	Low	Medium	Include thorough and detailed Air Brakes documentation in milestone documents	Requires time spent on Air Brakes documentation in all milestone documents. Reduction in resources allocated to competition payload.	Air Brakes have been approved thus far
SFR.6	Misinterpretation of payload challenge and requirements	Failure to complete payload challenge, disqualification	Low	High	Attend Q&A sessions, contact management team with clarifying questions	Informed team members and subsystem leads. Reduces points lost in documentation scoring. Avoids team disqualification.	The payload challenge has been accurately followed throughout the entirety of the project
SFR.7	Non-compliance to launch vehicle requirements	Failed milestones, disqualification	Low	High	Attend Q&A sessions, contact management team with clarifying questions	Informed team members and subsystem leads. Reduces points lost in documentation scoring. Avoids team disqualification.	Launch Vehicle requirements have been met thus far
SFR.8	Incorrect completion of STEM Engagement Activity Reports	Reduction in STEM Engagement score	Low	Medium	Attend STEM Engagement Webinar, contact management team with clarifying questions	Informed Officer Team and Outreach Lead. Results in an increase in quality of STEM Engagement reports and higher outreach score.	STEM Engagement Activity reports are currently being completed as instructed

7.7 Fault Tree Analysis

7.7.1 Vehicle Fault Tree Analysis

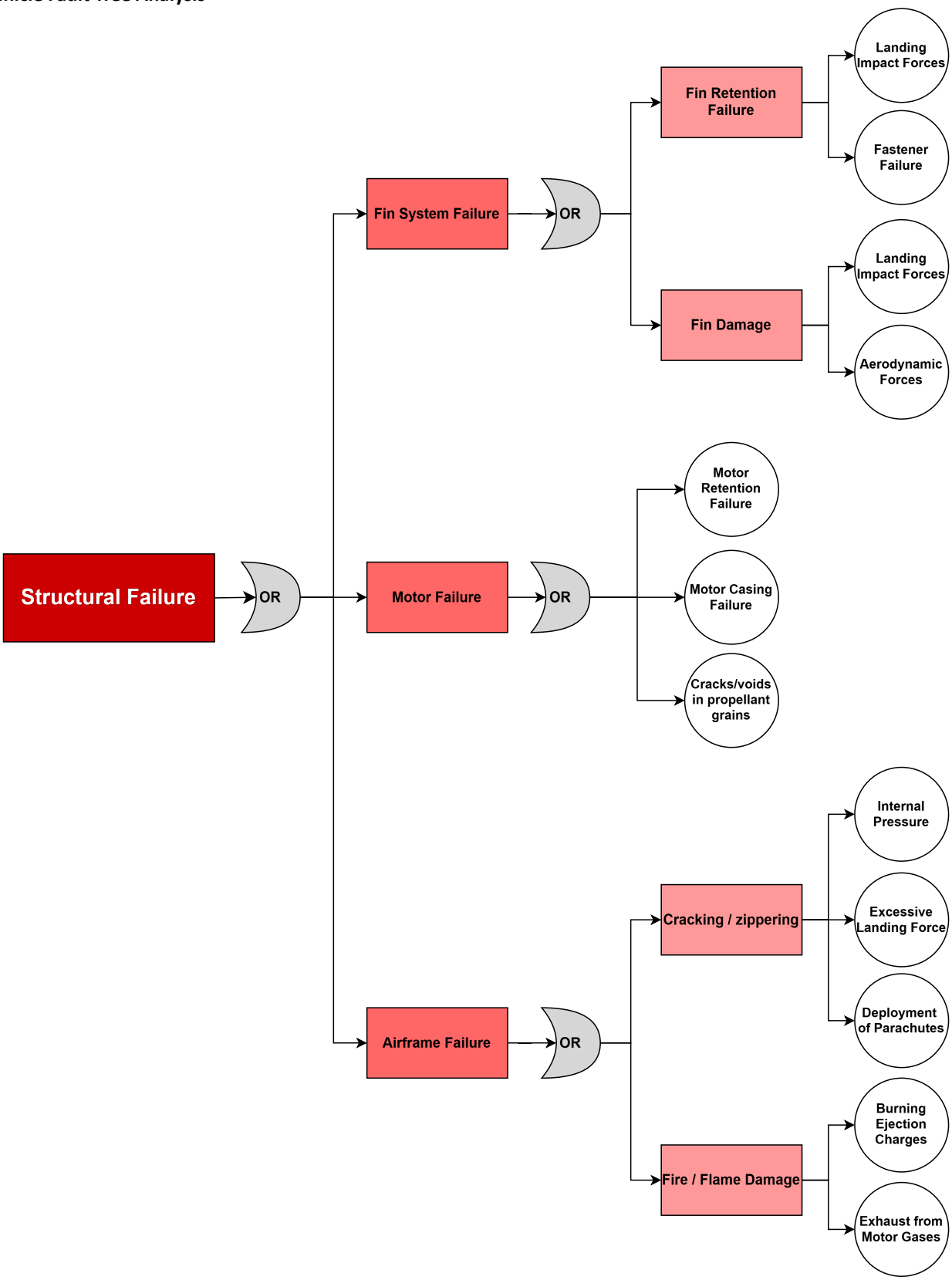

Figure 7.1: Structures FTA.

7.7.2 Recovery Fault Tree Analysis

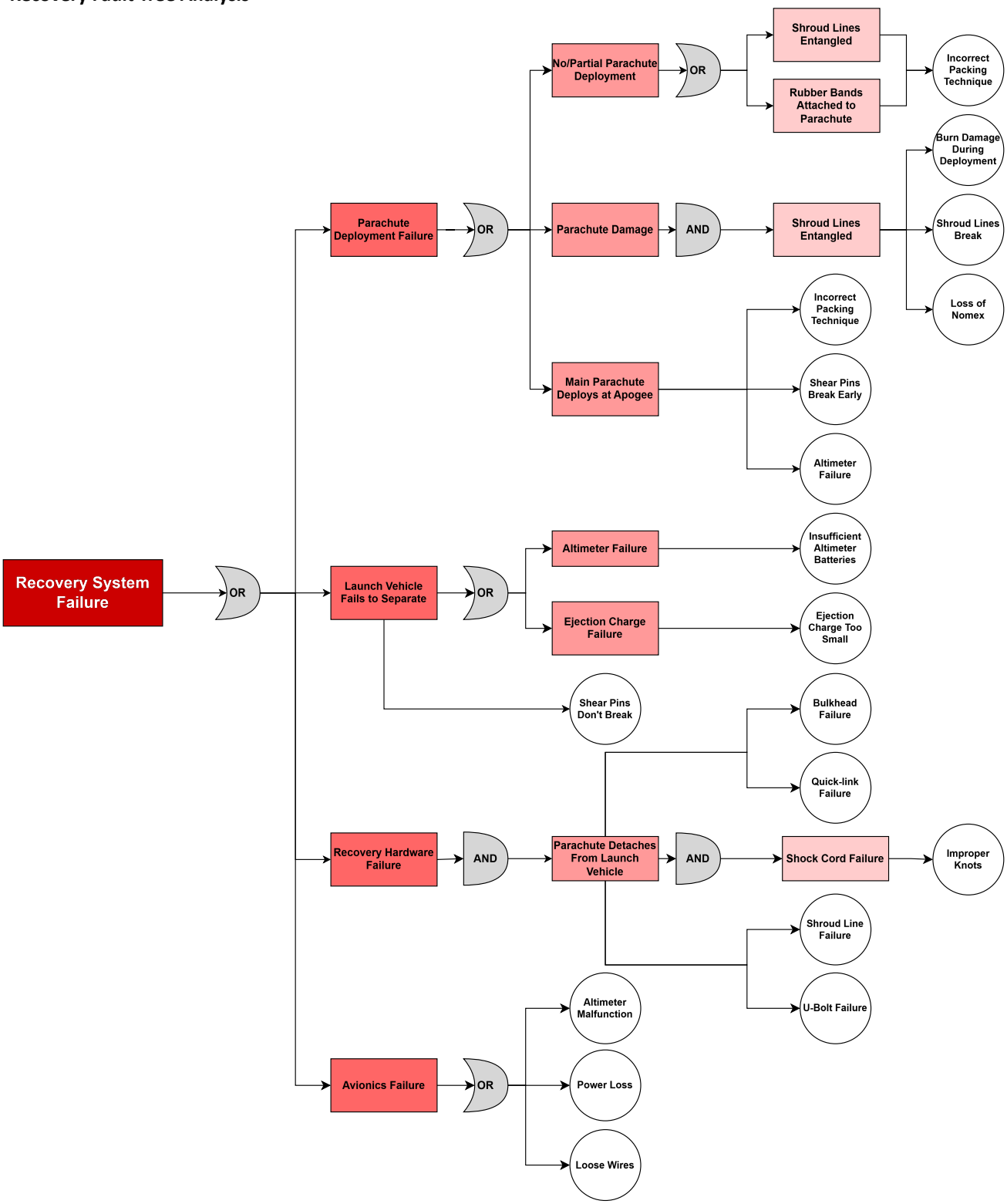

Figure 7.2: Recovery FTA.

7.7.3 Payload Fault Tree Analysis

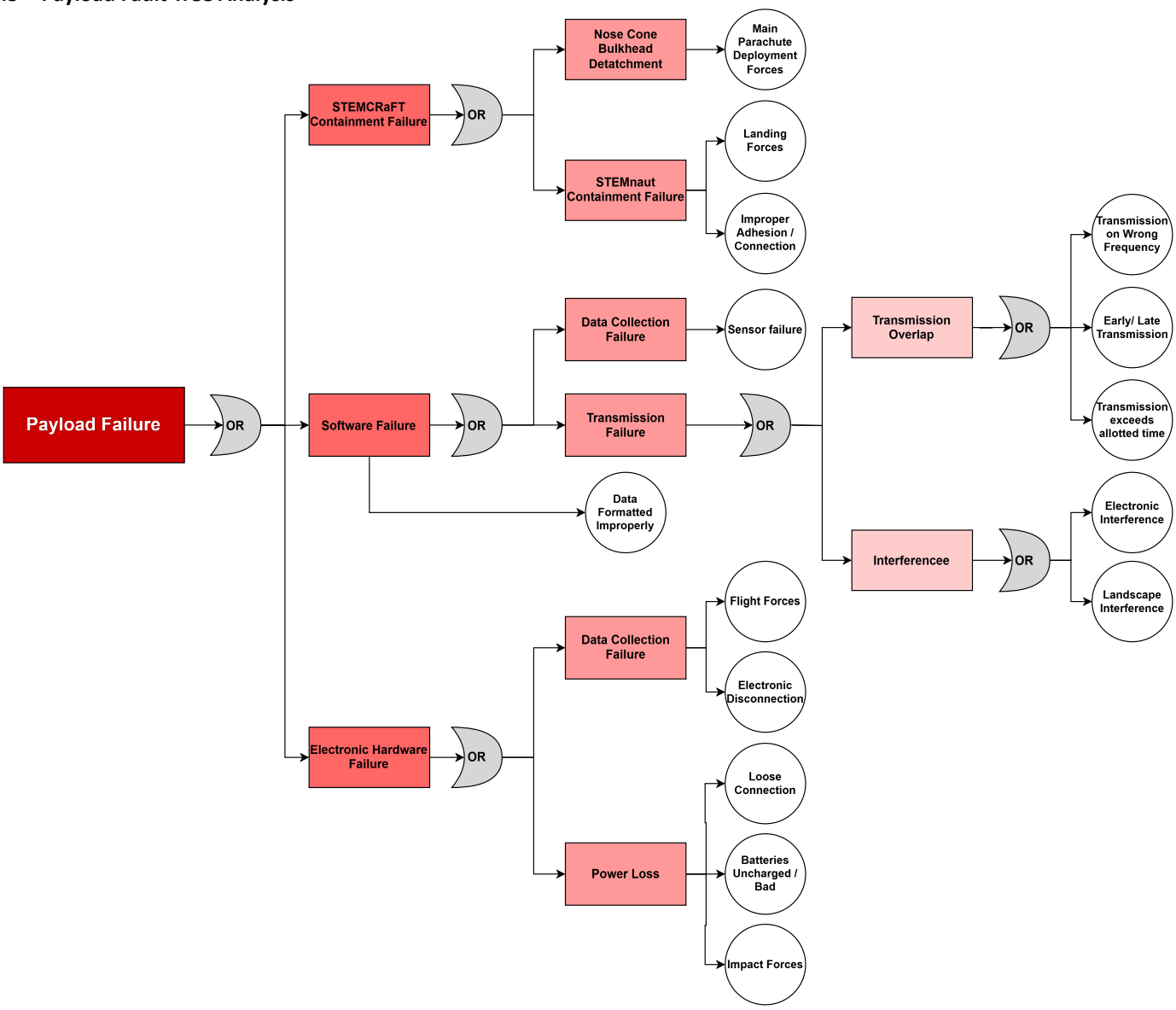

Figure 7.3: Payload FTA.

7.7.4 Air Brakes Fault Tree Analysis

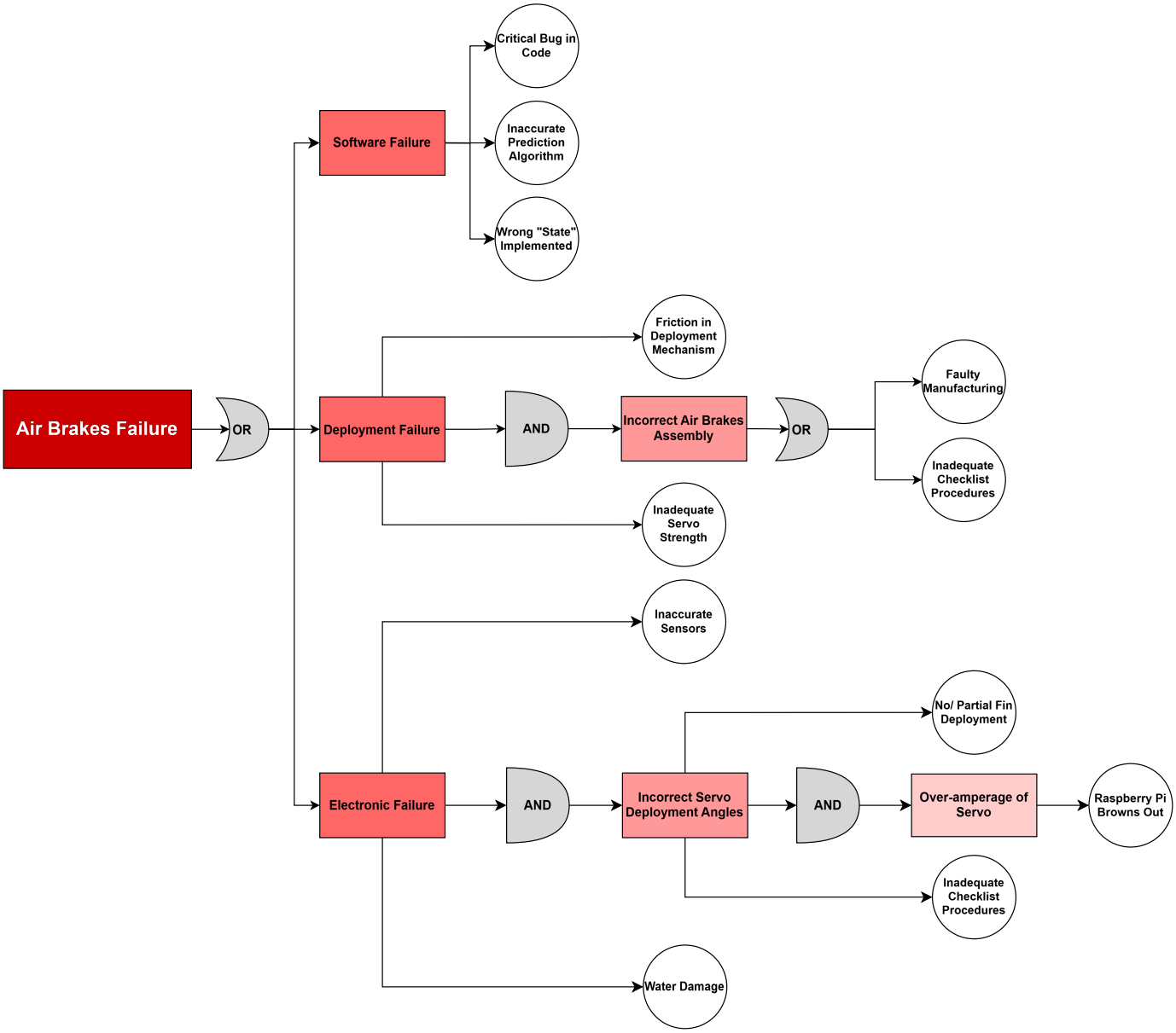

Figure 7.4: Air Brakes FTA.

8 Project Plan

8.1 Launch Vehicle Testing Suite

Table 8.1 summarizes all of the Launch Vehicle vehicle verification and testing required to prove the integrity of the launch vehicle and verify all requirements. All tests were completed prior to the Vehicle Demonstration Flight on March 8, 2025. Individual test purposes, procedures, and results are detailed below.

Table 8.1: Launch Vehicle Tests

Test	Requirement Verified	Date	Status
Subscale Ejection Test	NASA Req. 3.2, TDR RF.10, TDR RF.22	November 15, 2024	Verified
Subscale Dry Run	TDR LVF.2, TDR LVF.3	November 15, 2024	Verified
Subscale Demonstration Flight	NASA Req. 2.18	November 16, 2024	Verified
Moment of Inertia Test	TDR LVD.1	February 21, 2025	Verified

Nose Cone Bulkhead Tensile Test	TDR LVD.1	February 12, 2025	Verified
AVAB Bay Tensile Test	TDR LVD.1	February 12, 2025	Verified
Rivet Shear Loading Test	TDR LVD.1, TDR LVF.11	February 12, 2025	Verified
Shear Pin Shear Loading Test	TDR LVD.1, TDR LVF.12	February 20, 2025	Verified
Fin Can Impact Test	TDR LVD.1	February 18, 2025	Verified
Altimeter Test	TDR RF.13	February 26, 2025	Verified
GPS Test	TDR RD.5	February 26, 2025	Verified
Parachute Deployment Verification	TDR RF.17, RF.18	February 21, 2025 and February 26, 2025	Verified
Full-scale Ejection Test	NASA Req. 3.2, TDR RF.10, TDR RF.22	March 3, 2025	Verified
Full-scale Dry Run	TDR LVF.2, TDR LVF.3	March 7, 2025	Verified
Full-scale Demonstration Flight	NASA Req. 2.14, NASA Req. 2.16, NASA Req. 2.19, TDR PF.2, TDR PF.6, TDR PF.9, TDR PF.11	March 8, 2025	Verified

8.1.1 Subscale Ejection Test

Subscale ejection testing ensured that black powder charge sizes calculated with the ideal gas law were sufficient to separate the Launch Vehicle for parachute deployment. Ejection testing is necessary to verify that these analytical calculations are correct. This satisfies NASA Requirement 3.2 and Team Derived Requirement RF.24. The subscale ejection test was completed on November 15, 2024. Table 8.2 defines the success criteria for this test.

Table 8.2: Subscale ejection testing success criteria.

Success Criteria	Status
Complete separation at the connection point between the AVAB and Drogue Parachute Bay/ Fin Can	Verified
Complete separation at the connection point between the Nose Cone and AVAB	Verified
No damage to the Launch Vehicle	Verified
No damage to recovery materials or hardware	Verified

Controllable Variables

- Ejection charge size
- Test location
- Test set-up

Required Facilities, Equipment, Tools, and Software

- HPRC Lab
- Assembled Launch Vehicle
- Safety glasses
- Nitrile gloves
- Fireproof gloves
- Foam pads
- 9V battery
- Battery clip

Methodology

1. Assemble Launch Vehicle into launch day configuration with the following exceptions:
   (a) The AV and Air Brakes sleds are not placed inside of the AVAB, instead a mass simulator is used.
   (b) The e-match wires are not cut and inserted into terminal blocks, but instead threaded through the Air Brakes fin slots for easy access from the exterior of the Launch Vehicle.
   (c) Only the primary blast caps are filled with black powder.
   (d) A motor mass simulator is used in place of the motor.
2. The Launch Vehicle is placed horizontally on a piece of foam outdoors such that the forward and aft ends of the vehicle are at least 3 ft. away from walls or obstructions.
3. Any walls directly in front of or behind the vehicle are protected with another piece of foam.
4. Ensure battery is not connected to the battery clip.

5. One designated team member, equipped with safety glasses, approaches the Launch Vehicle to secure the ejection testing wires to the wires labeled ”drogue” on the exterior of the vehicle.
6. The designated team member returns to a safe distance.
7. Ensure that everyone is wearing safety glasses, no one is standing behind or in front of the Launch Vehicle, and everyone is at least 10 ft. from the sides of the Launch Vehicle.
8. The designated team member conducts a verbal countdown starting from 5.
9. Upon completion of the countdown, the team member connects a 9V battery to the ejection testing wires, detonating the drogue ejection charge.
10. The designated team member and safety officer approach the vehicle and, with fireproof gloves, ensure adequate separation of the Launch Vehicle sections. The safety officer then dumps out the contents of each section, including biodegradable insulation and shock cords, and puts out any sparks.
11. Steps 4-10 are repeated with the ejection testing wires secured to the wires labeled ”main.”

Results

Ejection testing resulted in full separation of the Launch Vehicle for drogue and main parachute deployment. This demonstrated that the black powder charges were sufficiently large to break the shear pins and deploy parachutes during descent. Ejection tests for the drogue parachute and the main parachute were both successful, and black powder masses were noted for use in the Subscale Demonstration Flight.

8.1.2 Subscale Dry Run

The objective of the Subscale dry run was to verify that the Launch Vehicle could be properly integrated on launch day and the written checklist procedures were fully complete and accurate. During dry run, the Launch Vehicle and simulated payload were fully constructed into launch day configuration, excluding the use of energetics. Final measurements of the Launch Vehicle were conducted to determine weight, on-pad center of gravity, and motor burnout center of gravity. This test was completed on November 15, 2024.

Table 8.3: Subscale dry run success criteria.

Success Criteria	Status
Burn out center of gravity is measured to be forward of the Air Brakes slots	Verified
Static stability is greater than 2.0	Verified

Controllable Variables

- Center of gravity
- Launch Vehicle stability
- Checklist procedures
- Motor casing preparation

Required Facilities, Equipment, Tools, and Software

- Additional mass for the simulated motor
- All tools, components, and hardware listed in the Subscale Launch Day Checklist in Section 6.2 of the CDR report

Methodology

Subscale dry run follows the Subscale Launch Day Checklist in Section 6.2 of the CDR report, excluding the use of any energetics. Additionally, on-pad motor mass and burnout motor mass are simulated with distributed weights in the motor casing. The on-pad motor mass is used to measure the static stability margin of the Launch Vehicle to ensure that it is greater than 2.0. The burn-out motor mass is used to measure the burn-out center of gravity and ensure that it is forward of the Air Brakes fins. The center of gravity of the Launch Vehicle is measured according to the Final Measurements section of the Launch Day Checklist.

Results

The Subscale dry run conducted prior to the Subscale Demonstration Flight was successfully completed, meeting all of the success criteria defined in Table 8.3. The initial dry run identified minor adjustments that needed to be made to the Launch Vehicle structure and Subscale Launch Day Checklist, all of which were corrected prior to launch. These changes ensured that the burn-out center of gavity was forward of the air brakes fin slots.



Figure 8.1: Center of gravity test to verify burnout CG position for the Subscale Launch Vehicle.

8.1.3 Subscale Demonstration Flight

The objective of the Subscale Demonstration Flight was to verify that the aerodynamic design of the Launch Vehicle functioned as intended on a smaller scale. This test was essential for validating the Launch Vehicle's design, construction methods, recovery system, and integration prior to construction of the Full-scale Launch Vehicle. A malfunctioning recovery system or significant structural damage to the launch vehicle would have caused the need for redesign and relaunch of the vehicle. Significant damage includes, but is not limited to, catastrophic damage to parachutes, zippering or cracking of the body tube, fin breakage, and bulkhead failure. The Subscale Demonstration Flight also allowed the team to gather flight data for the NASA Student Launch payload and experimental payload, Air Brakes, that could be used to complete future payload and Air Brakes software testing. A successful Subscale Demonstration Flight was completed on November 16, 2024, meeting all success criteria and verifying NASA Requirement 2.18.

Table 8.4: Subscale Demonstration Flight success criteria.

Success Criteria	Status
Launch Vehicle exits launch rail	Verified
Altimeter records apogee altitude	Verified
Altimeter produces a complete flight profile graph	Verified
Launch Vehicle is recovered in a relaunchable configuration	Verified
Launch Vehicle deploys at least one parachute during descent	Verified
Launch Vehicle records landing location	Verified

Controllable Variables

- Motor selection
- Parachute selection
- Shock Cord selection
- Altimeter selection
- GPS selection
- Ejection charge sizing
- Launch Vehicle mass
- Launch Vehicle stability

Required Facilities, Equipment, Tools, and Software

- Tripoli Range Safety Officer
- NASA Student Launch Team Mentor
- Subscale Checklist
- 10-10 Launch Rail
- Launch system
- All other tools, components, and hardware listed in the Subscale Launch Day Checklist in Section 9.2

Methodology

Subscale launch day procedures are located in Section 6.2 of the CDR report.

Results

The Subscale Demonstration Flight was successful and met all of the success criteria defined in Table 8.4 and NASA Requirement 2.18. The subscale vehicle was launched on an AeroTech J500G motor and had an apogee of 1512 ft., which is 3.6 percent different from the predicted 1567.3 ft. The recovery system worked nominally with the drogue parachute deploying at apogee and the main parachute deploying at 550 ft. The landing configuration of the launch vehicle can be seen in Figure 8.3. This demonstration flight resulted in changes in the RMFS and Air Brakes design. Some of the materials in the RMFS were changed for weight reduction, reducing the need for ballast in the Nose Cone on the Full-scale Launch Vehicle. Additionally, the integration of Air Brakes into the AVAB was changed to reduce shifting due to flight forces that would restrict the fins from deploying.



Figure 8.2: Subscale launch during Subscale Demonstration Flight



Figure 8.3: Subscale Nose Cone (left) and AVAB/ Main Parachute Bay (right) Landing Configuration

8.1.4 Moment of Inertia Test

The moment of inertia test determined the moment of inertia of the Launch Vehicle, which verified the precision of flight simulations. Accurate moment of inertia measurements ensured that simulation inputs were reliable, which enabled precise apogee prediction, as required by the competition.

Table 8.5: Moment of inertia success criteria.

Success Criteria	Status
Moment of inertia calculation is within 20 percent of the simulated value	Verified
Individual swing tests should remain within .5 kgm^2 of the average	Verified

Controllable Variables

- Length of support ropes
- Structural design of the swing
- Initial displacement
- Measurement equipment
- Duration of test
- Number of tests completed
- Launch vehicle configuration

Required Facilities, Equipment, Tools, and Software

- Moment of inertia swing
- AVAB Module with IMU
- Computer to collect data
- Measuring Tape

Methodology

1. Construct the moment of inertia swing.
2. Verify the structural integrity of the swing to support the Launch Vehicle.
3. Measure distance between collars and from the top of swing to the vehicle.
4. Ensure IMU connectivity.
5. Set an initial displacement of the Launch Vehicle so that it will rotate axially.
6. Record the displacement of the Launch Vehicle until it comes to rest.
7. Verify the collection of verifiable data.
8. Complete the test 5 times, repeating steps 3 through 7.
9. Process the displacement data saved from the experiment in MATLAB to yield the oscillation period for the moment of inertia calculation.

Results

The results from the moment of inertia calculation were within 10 percent error of the simulated values. Measured MOI was 10.208 kgm^2 and simulated was 9.47 kgm^2. Additionally, each individual tests were within 0.5 kgm^2 of the average of all tests.



Figure 8.4: Launch Vehicle on MOI Swing

8.1.5 Nose Cone Bulkhead Tensile Test

The purpose of this test was to verify the structural integrity and sufficient safety factor of the Nose Cone/ Payload Bay bulkhead assembly under tensile loading encountered during the deployment of the main parachute. The performance of this assembly is critical in ensuring the Nose Cone and main parachute remain attached to the remainder of the Launch Vehicle. This test was performed using a test article constructed in the same manner as the Nose Cone coupler assembly and bulkheads specified in Section 3.5.3. A scrap piece of airframe was substituted for the Nose Cone body with an extra thick plug bulkhead epoxied to one end to ensure sufficient strength to test the appropriate assembly components. The assembly components and interfaces being tested included the removable bulkhead U-bolt, removable bulkhead wood body, the two 1/4 in. threaded rods, the T-nut inserts in the ring bulkhead, the ring bulkhead body, and the epoxy bond between the ring bulkhead, coupler tube, and airframe tube.

Table 8.6: Nose Cone Bulkhead tensile test success criteria.

Success Criteria	Status
Assembly sustains a maximum tensile load greater than 410-lbf	Verified
Assembly maintains a factor of safety greater than 1.5	Verified

Controllable Variables

- Design of replacement Nose Cone
- Loading procedure
- Testing equipment
- Margin of safety
- Post-test analysis
- Bulkhead material
- Bulkhead thickness

Required Facilities, Equipment, Tools, and Software

- Instron Universal tensile testing machine (MAE Structural Mechanics Lab)
- 2 x 1/4 in. steel quick links
- 2 x 5/16 in. zinc-plated steel U-bolts with mount plates
- 1 x 1/2 in. Nose Cone/ Payload Bay bulkhead
- 2 x 1/2 in. Baltic Birch plywood bulkheads
- 2 x 1/4-20 threaded rods
- 2 x 1/4-20 T-Nuts
- 2 x 1/4 in. steel hex nuts
- 2 x 1/4 in. steel washers
- Safety glasses
- Camera

Methodology

1. Attach one steel quick link to each U-bolt on either side of the Nose Cone bulkhead assembly.
2. Fix each quick link to the opposite jaws of the universal load testing machine.
3. Place bulkhead assembly in slight tension.
4. Begin recording via camera.
5. Increment the tensile load via 10-ft-lbf increments. Briefly pause after each load increment to listen and visually inspect the test article for signs of failure.
6. If any component fails prior to 481.5-lbf., stop testing, document, and revise design before testing again.
7. Continue increasing load until at least 481.5-lbf. is reached (1.5 factor of safety). Higher loading may be attempted if desired.
8. Remove test assembly from the machine and visually inspect all components.

Results

The test was successful. The test article was subjected to a maximum load of 1410 lbf. at which point the test was suspended due to sufficient results. Material yield/failure point was not reached, however a safety factor of at least 4.4 was determined, which exceeds team derived requirements. Elastic deformation was observed in the bulkhead body under high loading, however no damage was found upon post-test inspection.



Figure 8.5: Nose Cone bulkhead assembly test article under maximum tested loading.

8.1.6 AVAB Bay Tensile Test

The AVAB Bay tensile test subjected the structural components of the AVAB assembly to tensile loading using an Instron universal testing machine. A test article was manufactured using the same process specified in Section 3.5.5. This test verified that the assembly was able to sufficiently withstand the maximum calculated shock force from the recovery system during flight, with an appropriate factor of safety. Since the AVAB bulkheads are used to attach the main parachute and the drogue parachute to the remainder of the Launch Vehicle, this test ensured the recovery system will not compromise the success of the flight.

Table 8.7: AVAB Bay tensile test success criteria.

Success Criteria	Status
Assembly sustains a maximum tensile load greater than 410-lbf	Verified
Assembly maintains a factor of safety greater than 1.5	Verified

Controllable Variables

- Configuration of all structural components
- Loading procedure
- Testing equipment
- Margin of safety
- Post-test analysis
- Bulkhead material
- Bulkhead thickness

Required Facilities, Equipment, Tools, and Software

- Universal tensile testing machine (MAE Structural Mechanics Lab)
- 2 x 1/4 in. steel quick links
- 2 x 5/16 in. zinc-plated steel U-bolts with mount plates
- 2 x 1/2 in. Baltic Birch plywood bulkheads
- 4 x 1/4-20 threaded rods
- 12 x 1/4 in. steel hex nuts
- 12 x 1/4 in. steel washers
- Safety glasses
- Camera

Methodology

1. Attach one steel quick link to each U-bolt on either end of the AVAB bulkhead assembly.
2. Fix each quick link in the opposite jaws of the universal load testing machine.
3. Place bulkhead assembly in slight tension.
4. Begin recording via camera.
5. Increment the tensile load via 10-ft-lbf increments. Briefly pause after each load increment to listen and visually inspect the test article for signs of failure.
6. If any component fails prior to 360-lbf., stop testing, document, and revise design before testing again.
7. Continue increasing load until at least 360-lbf. is reached (1.5 factor of safety). Higher loading may be attempted if desired.
8. Remove test assembly from the machine and visually inspect all components.

Results

The test was successful. The AVAB assembly test article was tested to a maximum loading of 1810 lbf. at which point the test was suspended due to sufficient results. Material yield/failure point was not reached. A safety factor of at least 7.5 was determined.



Figure 8.6: AVAB bulkhead assembly test article under maximum tested loading.

8.1.7 Rivet Shear Loading Test

The rivet shear loading test subjected the rivets that are used to secure the non-separating Launch Vehicle sections together during flight. This test verified that the Launch Vehicle will not separate at non-separating connections during flight due to forces from launch, parachute deployment, or landing. It also verified a sufficient safety factor for the rivet connections.

Table 8.8: Rivet shear loading test success criteria.

Success Criteria	Status
Rivet sustains a maximum tensile load of greater than 80-lbf	Verified
Rivet maintains a factor of safety greater than 2.0	Verified

Controllable Variables

- Configuration of all structural components
- Loading procedure
- Testing equipment
- Margin of safety
- Post-test analysis
- Number of rivets
- Rivet material
- Size of rivets

Required Facilities, Equipment, Tools, and Software

- Universal tensile testing machine (MAE Structural Mechanics Lab)
- Nylon rivet
- 1/8 in. thick G10 fiberglass shear test plates
- 2 x 1/4 in. steel quick links
- Safety glasses
- Camera

Methodology

1. Insert a test rivet into both holes in the shear test plates and push the rivet until secure.
2. Fix each quick link into opposite sockets of the universal load testing machine and secure with a steel roll pin.
3. Place the assembly in slight tension.
4. Begin recording via camera.
5. Increment the tensile load via 10-ft-lbf increments. Briefly pause after each load increment to inspect the rivet for signs of failure.
6. Continue to increase the load until failure.
7. Record the failure point and calculate the factor of safety.

Results

Two iterations of the test were conducted and both were successful. The first rivet failed at 194 lbf. which yielded a safety factor of 2.4. The second rivet failed at 186 lbf. which yielded a safety factor of 2.3.



Figure 8.7: Nylon rivet fastener secured into shear plate assembly.

8.1.8 Shear Pin Shear Loading Test

The shear pin shear loading test tested the failure point of the shear pins that are used to connect separating Launch Vehicle sections together during flight. This verified that the Launch Vehicle does not prematurely separate before black powder detonation due to forces from launch, coast, or drogue parachute deployment. It also verified that the shear pins will fail at the expected loading of 40 lbf. +/- 5 lbf.

Table 8.9: Shear pin shear load test success criteria.

Success Criteria	Status
Shear pins fail at 40 $\pm$5 lbf.	Verified

Controllable Variables

- Configuration of all structural components
- Loading procedure
- Testing equipment

- Margin of safety
- Post-test analysis
- Number of shear pins
- Shear pin material
- Size of shear pins

Required Facilities, Equipment, Tools, and Software

- Nylon shear pin
- 1/8 in. thick G10 fiberglass shear loading test plates
- 2 x 1/4 in. steel quick links
- Bench top vise
- Hanging scale
- Safety glasses
- Camera

Methodology

1. Insert the test shear pin through both holes in the shear loading test plates.
2. Attach the quick links to opposite shear plates.
3. Secure one quick link in the jaws of a bench top vise
4. Attach the hanging scale to the opposite quick link.
5. Position a camera to video record the scale display.
6. Begin recording via camera.
7. Apply a tensile force by pulling on the scale handle until the shear pin fails.
8. Record the failure loading and verify it is within expected values.

Results

The test was successfully conducted three times. The first shear pin failed at at 45 lbf., the second failed at 37 lbf., and the third failed at 38 lbf. All shear pins failed within the expected ultimate loading of 40 $\pm$5 lbf.



Figure 8.8: Shear pin test experimental setup.

8.1.9 Fin Can Impact Test

The Fin Can impact test simulated ground impact of the Fin Can components at the end of flight via drop testing. This test evaluated the interaction of the fins and interior RMFS structure upon impacting the ground. A scrap piece of fiberglass airframe was used as a stand-in for the Fin Can airframe to allow for more flexibility in raising the test article to the necessary drop height to achieve the desired impact energy of 75 ft-lbs. This test validated that the fins, RMFS, and Fin Can can survive the maximum kinetic energy impact determined by NASA Requirement 3.3.

Table 8.10: Fin Can impact test success criteria.

Success Criteria	Status
Fin Can assembly suffers no damage	Verified
RMFS components suffer no damage	Verified
Fins suffer no damage	Verified

Controllable Variables

- RMFS configuration including attachment of weights and the scrap piece of airframe
- Impact angle
- Impact surface
- Drop methodology
- Test repetition

Required Facilities, Equipment, Tools, and Software

- Test stand base
- 1515 aluminum extruded rail sections with eye-bolt
- Bags of sand ballast
- Greater than 25 ft. of 550 para-cord
- RMFS assembly and associated fasteners.
- AeroTech RMS 75/3840 motor casing with 3/8 eye bolt
- 1/4 in. eye bolt
- Fiberglass fins
- Tape measure
- Safety glasses
- Camera

Methodology

1. Assemble the Fin Can test article by fastening the RMFS with installed motor casing to the scrap airframe.
2. Measure the mass of the assembled test article.
3. Use kinematic equations and the formula for kinetic energy to calculate the required mass to generate 75 ft-lbs of kinetic energy prior to impact using the planned test drop height.
4. Load the motor casing with bags of sand ballast to meet required mass.
5. Tie a length of cord to an eye-bolt on the test article, feed the remaining length of cord through the test stand rail eye-bolt.
6. Mark off the proper length of cord to meet the drop height requirement on the cord using masking tape.
7. Set up the test stand and ensure it is stable.
8. Ensure the impact area is clear and observers are at a safe distance away.
9. Slowly raise the Fin Can test article to the required height.
10. Begin recording.
11. Drop the test article by releasing the cord and allow the Fin Can to impact the ground.
12. Visually inspect for any damage and confirm the correct fin position and orientation.
13. Repeat the test as necessary to obtain various impact scenarios.

Results

The test was successful. The Fin Can was dropped in a vertical orientation three separate times. Each time the fins dug into the Earth and no damage was sustained. The Fin Can was then dropped twice in a horizontal impact configuration. Both times, the Fin Can bounced approximately 1 ft. off the ground due to an elastic response in the fin assemblies. No damage was suffered to any system component.



(a) Drop test experimental setup.



(b) Results of a vertical drop test. Fins sliced into ground and no damage was sustained.

Figure 8.9: Experimental setup and results of the drop test.

8.1.10 Altimeter Test

The altimeter test ensured that both the primary and secondary altimeters used on the Launch Vehicle operated properly and were programmed correctly before launch. Using a vacuum pressure chamber, a flight was simulated and the altimeters were checked to verify that charges were sent for both drogue and main parachute deployment at the appropriate altitudes. This was necessary to ensure proper separation and recovery of the Launch Vehicle on launch day.

Table 8.11: Altimeter Test Success Criteria

Success Criteria	Status
Drogue and main deployment LEDs light up at their appropriate times given the change in pressure in the chamber for the primary altimeter	Verified
Flight data of the test indicates that drogue and main charges deployed for the primary altimeter	Verified
Drogue and main deployment LEDs light up at their appropriate times given the change in pressure in the chamber for the secondary altimeter	Not Verified
Flight data of the test indicates that drogue and main charges deployed for the secondary altimeter	Verified

Controllable Variables

- Vacuum chamber conditions
- Orientation of altimeter in vacuum chamber
- Visual indication method
- Flight data verification method
- Testing repetition

Required Facilities, Equipment, Tools, and Software

- Perfect Flite StratologgerCF
- Altus Metrum EasyMini
- Computer with Perfect Flite Data Cap & AltosUI
- 9V battery
- 7.4V LiPo battery

- Pressure Chamber
- Plumbers Putty
- LED altimeter testing board

Methodology

1. Program the primary altimeter using the Perfect Flite Data Cap software.
2. Program the secondary altimeter using the AltosUI software.
3. Connect the primary altimeter to the LED testing board such that the orange LED is plugged into the drogue e-match slot and the yellow LED is plugged into the main e-match slot.
4. Connect the secondary altimeter to the LED altimeter testing board such that the green LED is connected to the drogue e-match slot and the red LED is plugged into the main e-match slot.
5. Connect the 9V battery to the primary altimeter and the 7.4 LiPo battery to the secondary altimeter.
6. Place both the altimeters, LED boards, and batteries in the pressure chamber.
7. Place a cell phone on the Plexiglass cover of the vacuum chamber and start recording a video of the test.
8. Slowly bring the chamber pressure to the minimum vacuum pressure.
9. Observe the pressure chamber to verify the orange LED lit up just after the pressure was brought down to the minimum with the green LED lighting up shortly after.
10. Slowly bring the pressure chamber back up to atmospheric pressure.
11. As the chamber pressure increases, the yellow LED should light up very quickly followed by the red LED.
12. Wait a few seconds for the altimeters to detect landing and then power them off.
13. Connect the primary altimeter to a computer and view the flight profile using Perfect Flite Data Cap. The data should show the drogue charge signal was sent at ”apogee” and the main charge signal was sent at ”550 ft.”
14. Connect the secondary altimeter to a computer and view the flight profile using AltosUI. The data should show the drogue charge signal was sent 1 second after ”apogee” and the main charge signal was sent at ”500 ft.”
15. Compare the altitude plots from both of the altimeters to ensure that they look the same.

Results

The altimeter tests were fully successful with the orange LED lighting up just after the pressure was brought down to the minimum shortly followed by the green LED. This indicates that the primary altimeter triggered deployment at apogee followed by the secondary altimeter one second later, as expected. As pressure was reintroduced into the chamber, the yellow LED lit up, very quickly followed by the red LED. Analysis of the altitude plots for both altimeters following the altimeter testing confirmed that the drogue and main charges were fired at the expected times for both of the altimeters. Figures 8.10a and 8.10b show that each of the altimeters looked nearly identical, confirming the accuracy and consistency of both altimeter’s pressure sensors.

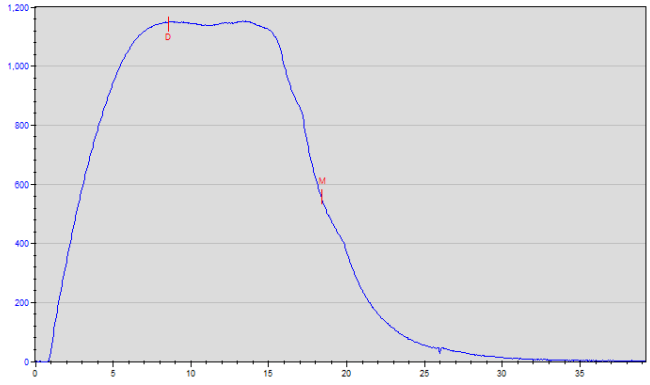

(a) Stratologger Altimeter Test Plot

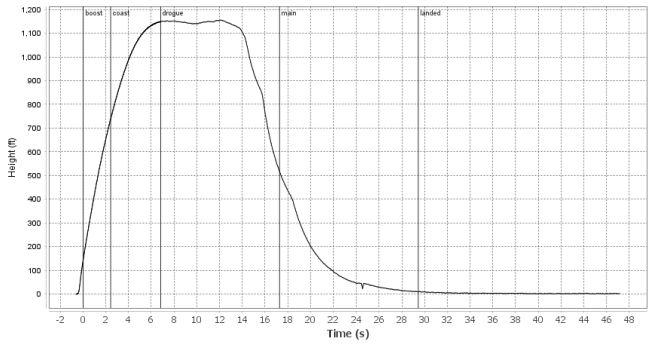

(b) EasyMini Altimeter Test Plot

Figure 8.10: Comparison of altimeter test plots for Stratologger and EasyMini.

8.1.11 GPS Test

The GPS test will evaluate the Full-scale GPS's transmission, battery life, and accuracy. The GPS must be able to transmit accurate coordinates on launch day as per NASA Requirement 3.13. The GPS is also required to be able to last at least 3 hours without losing functionality, as per NASA Requirement 2.5. These tests are necessary to verify all NASA Requirements regarding tracking devices.

Table 8.12: GPS Test Success Criteria

Success Criteria	Status
GPS receiver maintains a consistent and reliable connection with the Eggfinder Mini GPS transmitter within a radius of 1.5 miles	Verified
Eggfinder Mini GPS transmitter remains on and powered for at least 3 hours under typical usage conditions	Verified
The receiver consistently picks up the GPS signal from the Eggfinder Mini GPS transmitter as the distance increases	Verified

Controllable Variables

- Test location and environmental factors
- Maximum distance between GPS and receiver
- Test repetition
- Acceptable accuracy range

Required Facilities, Equipment, Tools, and Software

- Two 2 cell 1000 mAh lipos
- Eggfinder Mini GPS Transmitter
- Receiver
- Two individuals
- Phone
- Data logging device

Methodology

1. Ensure full battery life for GPS transmitter and receiver.
2. Power on GPS transmitter and receiver by plugging each respective item into it's own 2 cell 1000 mAh LiPo. The GPS must use this type of LiPo. However, the receiver can be another type of 2 cell LiPo.
3. Do not turn off the transmitter for the entirety of the test.
4. Verify that the transmitter connects to the receiver and that the receiver connects to a satellite.
5. One individual holds the receiver and stays in place outside.
6. The second individual holds the transmitter and will move to a known secondary location a set distance away from the starting point.
7. At the secondary location, the transmitter holder will use their mobile device to find the approximate distance from the receiver holder and record their latitude and longitude coordinates.
8. The receiver holder will record the coordinates displayed on the receiver.
9. Repeat steps 5-8 for 3-7 repetitions while the receiver holder remains in the same location.
10. Transmitter holder returns to EB3 or the starting location.
11. At the starting location, the transmitter holder and receiver holder compare coordinates recorded by both the transmitter and receiver.
12. Accuracy is evaluated and any discrepancies are noted.
13. Turn off the receiver.
14. Verify that the GPS transmitter is on after completing the range test.
15. Allow the GPS battery to run till the timer reaches 3 hours.
16. Turn off the GPS/transmitter.

Results

The Eggfinder Mini GPS transmitter transmitted accurate data that is within 5-10 meters of the actual location. The Eggfinder Mini GPS transmitter also remained on and powered for 3 hours under typical usage conditions. Finally, the receiver consistently read the GPS signal from the Eggfinder Mini GPS transmitter. There were no significant differences in the results between the GPS data and external GPS data collected (phone location). The table below shows the coordinates received from the receiver and the coordinates gathered from the phone measured location of the transmitter. The error between the two separate measurements is minimal and negligent according to the previously established success criteria.

Table 8.13: GPS Test Results

Reciever Coordinates		Transmitter Location - Phone Measurement		Percent Difference	
Latitude	Longitude	Latitude	Longitude	Latitude	Longitude
35.76605	-78.67481	35.76599	-78.67489	0.00016	-0.00010
35.76444	-78.67449	35.76444	-78.67455	-0.00001	-0.00007
35.76209	-78.67687	35.76200	-78.67692	0.00025	-0.00006
35.76105	-78.6802	35.76104	-78.68023	0.00003	-0.00004
35.76105	-78.6802	35.76028	-78.68308	0.00216	-0.00366
35.77043	-78.66994	35.77035	-78.66987	0.00023	0.00009
35.77033	-78.66536	35.77035	-78.66520	-0.00005	0.00020
35.76758	-78.66256	35.76761	-78.66260	-0.00007	-0.00005
35.77092	-78.66375	35.77089	-78.66381	0.00009	-0.00008

8.1.12 Parachute Deployment Verification Test

The parachute deployment verification test will evaluate the folding techniques of the full-scale main and drogue parachutes to ensure minimal shroud line entanglement during packing and recovery events. The parachutes must fully deploy during flight to ensure accurate calculations of drag coefficients, enabling the descent velocity and kinetic energy requirements outlined in NASA Requirement 3.3 to be met.

Table 8.14: Parachute Deployment Test Success Criteria

Success Criteria	Status
Parachutes demonstrate consistent and reliable deployment within an acceptable time frame	Verified
Shroud line entanglement does not limit the deployment of the parachute	Verified
Both the drogue and main parachutes reach a full canopy prior to landing.	Verified

Controllable Variables

- Parachute folding technique
- Parachute condition
- Parachute packing method
- Parachute release method
- Drop site location and height
- Simulated weight attachment method
- Parachute measurement parameters
- Test repetition

Required Facilities, Equipment, Tools, and Software

- Full-scale main parachute
- Full-scale drogue parachute
- Full-scale main parachute deployment bag
- Full-scale drogue parachute nomex
- Main parachute shock cord
- Simulated weighted bay
- Tall building
- Recording equipment
- Scale

Methodology

1. Inspect parachutes for damage, knots in shroud lines, and fraying fabric.
2. Pack the main parachute using the recommended Fruity Chutes packing guide for elliptical parachutes.
3. Insert the packed parachute into the deployment bag. Ensure that all rubber bands are removed.
4. Fold the shroud lines into the deployment bag straps and make sure they remain organized and untangled.
5. Pack the drogue parachute using the ”Z-fold technique”.
6. Wrap the drogue parachute in a nomex cloth and secure it with a rubber band for transport.
7. Attach a small 4 lb. section of blue tube to the drogue parachute. This weight is enough to remove the parachute from the nomex, while ensuring the safety of the object and individuals during the test.
8. Attach an 8 lb. section of blue tube to the main parachute. This weight is enough to remove the parachute from the deployment bag, while ensuring the safety of the object and individuals during the test.
9. Attach a length of shock cord to the deployment bag for the main parachute. This will be used to ensure that the parachute is fully removed.
10. Transport the items to the designated building.
11. Ensure that the drop site has no potential hazards above or below the release site.
12. Remove the rubber band from the drogue parachute nomex.
13. Start video recording from multiple viewpoints.
14. Throw the drogue parachute system from the drop site to simulate recovery descent.
15. Monitor and record shroud line behavior, mark any notice of shroud line entanglement, location of full parachute deployment, and general parachute behavior.
16. Stop video recordings.
17. After the drop test, inspect the parachute for tangling, improper deployment, or damage. Note any observations.
18. Clear and then remove the drogue parachute from the landing area.
19. For the main parachute test, three people shall be involved. The first person throws the simulated weight. The second person assists in throwing the parachute/deployment bag. The third person holds the length of shock cord.
20. Start video recording from multiple viewpoints.
21. The first two people throw the assembly off of the drop site (building). The third person maintains a steady grip on the shock cord.
22. Monitor and record shroud line behavior, mark any notice of shroud line entanglement, location of full parachute deployment, and general parachute behavior.
23. Stop video recordings.
24. After the drop test, inspect the parachute for tangling, improper deployment, or damage. Note any observations.
25. Clear and then remove the main parachute from the landing area.

Results

The parachutes deployed without significant delay or shroud line entanglement. The new folding mechanism for the main parachute opened quickly and resulted in a full canopy prior to descent. After inspection of drogue and main parachute landings, the shroud lines remain untangled and no damage was sustained by the simulated mass container.

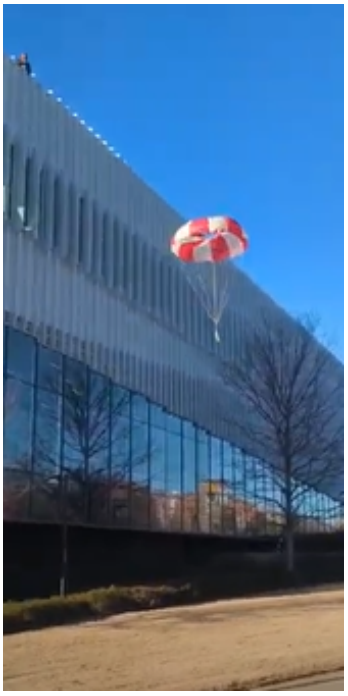

(c) Main Parachute Deployment Test



(d) Drogue Parachute Deployment Test

8.1.13 Full-scale Ejection Test

Full-scale ejection testing ensured that the black powder charges calculated were sufficient to separate the appropriate sections of the fully assembled Launch Vehicle for parachute deployment. This was necessary to verify a successful recovery during launch. Ejection charge sizes were calculated analytically based on the ideal gas law but were also experimentally verified prior to launch in accords with NASA Requirement 3.2.

Table 8.15: Full-scale ejection testing success criteria.

Success Criteria	Status
Complete separation at the connection point between the AVAB and Drogue Parachute Bay/ Fin Can	Verified
Complete separation at the connection point between the Nose Cone and Main Parachute Bay	Verified
No damage to the Launch Vehicle	Verified
No damage to the recovery materials or hardware	Verified

Controllable Variables

- Ejection charge size
- Test location
- Test set-up

Required Facilities, Equipment, Tools, and Software

- HPRC Lab
- Assembled Launch Vehicle
- Safety glasses
- Nitrile gloves
- Fireproof gloves
- Flat outdoor area
- Foam pads
- 9V battery

Methodology

1. Assemble Launch Vehicle into launch day configuration with the following exceptions:
   (a) The AV and Air Brakes sleds are not placed inside of the AVAB, instead a mass simulator is placed in that section.
   (b) The e-match wires are not connected to the altimeters or terminal blocks, but instead threaded through the Air Brakes fin

slots for easy access from the exterior of the Launch Vehicle.

(c) Only the primary blast caps are filled with black powder.

(d) A motor mass simulator is used in place of the motor.

2. The Launch Vehicle is placed horizontally on a piece of foam such that the forward and aft ends of the Launch Vehicle are at least 3 ft. away from walls or obstructions and the forward end of the vehicle faces away from the wall.
3. Any walls in front of or behind the Launch Vehicle are protected with an additional piece of foam.
4. Ensure that the battery clips are not connected to any power source such as a battery.
5. Ensure that all members present for the ejection test are equipped with safety glasses.
6. One designated team member attached the battery clips to the ejection testing e-match wire labeled ”drogue.”
7. The designated team member backs at least 10 ft. away from the Launch Vehicle.
8. Ensure that everyone is wearing safety glasses, no one is standing in front of the Launch Vehicle, and no one is within 10 ft. of the Launch Vehicle.
9. The designated team member begins a verbal countdown from 5.
10. Once the countdown reaches 0, the team member connects a battery to the ejection testing wires, detonating the drogue ejection charge.
11. With fireproof gloves, the designated team member and the safety officer approach the Launch Vehicle and ensure that the vehicle separated as expected and that there is no damage to the Launch Vehicle.
12. Steps 4-11 are repeated with the ejection testing wires secured to the wires labeled ”main.”
13. In the event that either the main or drogue sections failed to separate, disassemble and clean the launch vehicle. Increase the failed black powder charge by 0.2 g and repeat steps 1-12.

Results

This test was fully successful on the first attempt with complete separation between the AVAB and Drogue Parachute bay with a 2.8 g black powder charge and complete separation between the Nose Code and Main Parachute Bay with a 3.1 g black powder charge. Neither the vehicle nor any recovery hardware sustained any damage as a result of this test. This verified that the primary black powder charges for each of these sections were adequate to ensure complete vehicle separation during flight. Figures 8.11a and 8.11b show the launch vehicle immediately after separation during ejection testing.

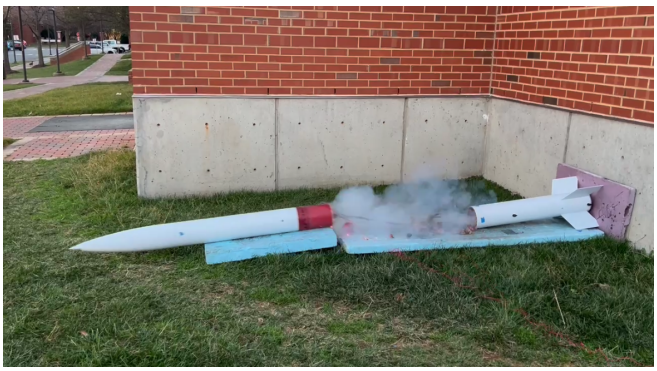

(a) Full-scale Drogue Parachute Ejection Test



(b) Full-scale Main Parachute Ejection Test

Figure 8.11: Parachute ejection tests: drogue and main separation.

8.1.14 Full-scale Dry Run

The Full-scale dry run verified that the Launch Vehicle and the Launch Day Checklist were ready for launch. During dry run, the Launch Vehicle and payload were fully constructed into launch day configuration using the Launch Day Checklist, excluding the packing or use of energetics. At the conclusion of the dry run, final measurements were taken of the on-pad static stability, the burn out center of gravity, and the weight of the Launch Vehicle. Final measurements were conducted using simulated weights to represent the on-pad motor mass and burn-out motor mass. The Launch Vehicle was then systematically disassembled in the same sequence it would experience during flight to verify the completeness of the recovery system. This test was completed on March 7, 2025.

Table 8.16: Full-scale dry run success criteria.

Success Criteria	Status
Burn out center of gravity is measured to be forward of the Air Brakes slots	Verified
Static stability is greater than 2.0	Verified

Controllable Variables

- Center of gravity
- Launch Vehicle stability
- Checklist procedures
- Motor casing preparation
- Method of disassembly

Required Facilities, Equipment, Tools, and Software

- Additional mass for the simulated motor
- All tools, components, and hardware listed in the Launch Day Checklist in Section 7.2.

Methodology

Full-scale dry run followed the Launch Day Checklist included in Section 7.2, excluding the use of energetics, such as the motor and ejection charges. During dry run, on-pad motor mass was used to measure the static stability margin of the Launch Vehicle on the pad and ensure it was greater than 2.0, per NASA Requirement 2.14. Burn-out motor mass was used to measure the burn-out center of gravity to ensure that it was forward of the Air Brakes fin slots, per NASA Requirement 2.16. The center of gravity was measured according to the final measurements section of the Launch Day Checklist.

At the conclusion of final measurements, the shear pins connecting the Fin Can to the aft end of the AVAB were removed and the two sections were pulled in opposite directions. This resulted in the deployment of the drogue parachute and the full extension of the drogue parachute shock cord. Subsequently, the shear pins connecting the forward end of the Main Parachute Bay and the Nose Cone were removed and the two sections were pulled in opposite directions. This caused the main parachute to be released from the Main Parachute Bay and deploy from the deployment bag. This also resulted in full extension of the main parachute shock cord. The Launch Vehicle and recovery system were then configured on the ground to ensure that no sections would collide while descending under the drogue or main parachute.

Results

A Full-scale dry run was successfully completed prior to VDF and PDF. This resulted in minor changes to the full-scale checklist that were corrected to ensure smooth launch day operations. All sections fit together as expected, and simulations resulted in a measured center of gravity close to the predicted location. The burn-out center of gravity is shown below in Figure 8.12.



Figure 8.12: Full-scale burn-out center of gravity test.

8.1.15 Full-scale Demonstration Flight

The objective of the Full-scale Demonstration Flight was to verify the stability, structural integrity, recovery system, and the team's ability to prepare the Launch Vehicle for flight. The demonstration flight also validated the Launch Vehicle's ability to safety retain the constructed payload, and ensure the payload performed as designed. A Vehicle Demonstration Flight and a Payload Demonstration Flight were required by NASA Requirements 2.19.1 and 2.19.2, respectively. Both flights were completed on March 8, 2025. Further details on the flight are provided in Section 6.

Table 8.17: Full-scale Demonstration Flight success criteria.

Success Criteria	Status
Launch Vehicle departs launch rail traveling vertically until motor burnout	Verified
Launch Vehicle's recovery system performs as designed.	Verified
Launch Vehicle endures minimal damage such that it could be relaunched in the same day	Verified
Altimeter flight profile data is complete	Verified
Quality pictures of the as landed configuration of all sections of the Launch Vehicle are taken	Verified

Table 8.17: Full-scale Demonstration Flight success criteria.

Success Criteria	Status
Payload is safely retained throughout the duration of the flight	Verified
Payload systems preform as designed	Verified

Controllable Variables

- Launch Vehicle mass
- Launch Vehicle stability
- Parachute selection
- Motor selection
- Payload configuration

Required Facilities, Equipment, Tools, and Software

- Tripoli Range Safety Officer
- NASA Student Launch Team Mentor
- Full-scale Checklist
- 15-15 Launch rail
- Launch system
- All other tools, components, and hardware listed in the Launch Day Checklist in Section **??** and the packing list in Section 7.2.

Methodology

The procedure for the Full-scale Demonstration Flight followed the Launch Day Checklist located in Section 7.2.

Results

During the VDF and PDF, the Launch Vehicle was launched in its final flight configuration and contained the final version of the competition payload and air brakes, as of launch day. Fully ballasted and flown on an AeroTech L1520T motor, the launch vehicle weighed 42.9 lbs and had a stability of 2.6. The predicted apogee of the Launch Vehicle without Air Brakes was 4088 ft and the targeted apogee with Air Brakes was 3700. Unfortunately, due to weather cocking, high winds, and an unstable launch pad, the apogee was undershot and the Air Brakes did not deploy. This resulted in an apogee of 3571 ft, as recorded by the primary altimeter. The recovery system functioned as designed with the drogue parachute deploying at apogee and the main parachute deploying at 550 ft. This resulted in a descent time and a kinetic energy that meets bonus point requirements. Additionally, the payload was safely retained during the flight and was set-up to function as intended when set up on launch pad. Due to technical errors, the payload did not collect or transmit data, but the issues have been identified and mitigated.Further results and analysis is found in Section 6.

8.2 Payload Testing Suite

Table 8.18 identifies all of the tests required to prove the integrity of the final Payload and Air Brakes design. These tests were completed prior to the Payload Demonstration Flight on March 8, 2025. Individual test purposes, procedures, and results are described below.

Table 8.18: Payload Tests

Test	Requirement Verified	Date	Status
WARHEAD Data Collection Flight Test	TDR PF.1, TDR PF.5, TDR PF.6, TDR PF.7, TDR PF.8, TDR PF.9, TDR PF.10, TDR PF.11, TDR PF.12, TDR PF.13, TDR PD.4	January 25, 2025	Verified
WARHEAD Simulated Flight Transmission Test	TDR PF.4	February 28, 2025	Verified
WARHEAD Remote Override Test	TDR PF.1	February 28, 2025	Verified
WARHEAD Data Transmission Verification	TDR PF.1, TDR PD.9	March 5, 2025	Verified
WARHEAD Power Supply Verification	TDR PF.9	March 4, 2025	Verified
WARHEAD Transmission Range Test	TDR PF.1, TDR PD.8	February 21, 2025	Verified
WARHEAD Antenna Polarization Test	TDR PF.1, TDR PF.16	February 21, 2025	Verified

WARHEAD FUSE Data Collection Frequency Test	TDR PF.1, TDR PF.12, TDR PF.13	February 21, 2025	Verified
WARHEAD Remote Override Range Test	TDR PF.1, TDR PF.10, TDR PF.17	February 21, 2025	Verified
WARHEAD Vacuum Chamber Test	TDR PF.1	February 21, 2025	Verified
Nose Cone with STEMCRaFT Drop Test	TDR PF.7, TDR PF.18, TDR PF.19	February 21, 2025	Verified
Camera Logging Endurance Test	TDR PF.1	March 6, 2025	Verified
Air Brakes Deployment Test	TDR ABF.1, TDR ABF.2	February 20, 2025	Verified
Air Brakes Flight Simulation Test	TDR ABF.4, TDR ABF.5	January 31, 2025	Verified
Air Brakes Effectiveness Flight Test	TDR ABF.1, TDR ABF.2, TDR ABF.3, TDR ABF.4	February 22, 2025	Verified
Air Brakes Battery Life Test	TDR ABF.4, TDR ABF.5	March 6, 2025	Verified

8.2.1 WARHEAD Data Collection Flight Test

The WARHEAD data collection test aimed to confirm the data collection capabilities of various onboard sensors during a flight similar to the competition flight. This test took place on January 25th, prior to the Payload Demonstration Flight, and gained data that was used to further refine the functionality of the WARHEAD. The FUSE data collection subsystem was mounted in the Nose Cone alongside the rest of the payload hardware. The accuracy of the collected data was verified using externally gathered data points.

Table 8.19: WARHEAD Data Collection Flight Test success criteria.

Success Criteria	Status
Recorded sensor data falls within the acceptable range of externally verified data	Verified
Data is recorded throughout the flight without any sensors failing to record data points	Verified

Controllable Variables

- Launch conditions
- Calibration of sensors
- Mounting location of sensors and electronics within Nose Cone
- Selection of external data points used in verification of sensor accuracy
- Configuration of transmitter and data packet format
- Level of accuracy that is acceptable in recorded data points

Required Facilities, Equipment, Tools, and Software

- Fully assembled WARHEAD
- FUSE data collection system sensors
  - BNO085 Inertial Measurement Unit
  - DPS310 Barometric Pressure Sensor
  - SAM-M10Q GPS Chip Antenna Module
- External sensors
  - Mobile phone with GPS
  - Launch vehicle altimeters
  - Local weather data
- Windows/Linux TORCH ground station laptop
  - VS Code Software
  - Direwolf Software
  - Ground station XBee Pro S3b
  - 2M radio receiver

Methodology

1. Fully assemble the WARHEAD with the FUSE and SWITCH subsystems fully functional.
2. Prior to launch pad procedure, verify functionality of subsystems via test programs.

3. Insert pull pin into WARHEAD until launch pad portion of checklist.
4. Initialize payload software at the launch pad immediately prior to launch.
5. Detach software such that the payload can perform its data collection independently of any ground station during flight.
6. Begin monitoring for APRS broadcast upon landing of launch vehicle. If no broadcast begins shortly after landing, utilize remote override system.
7. Recover WARHEAD after transmission has completed/failed to initialize.
8. Inspect the data collected during the launch and compare it to the data from independent sensors to verify the accuracy of the recorded data.

Results

This test was a success. The sensors were able to record full data points throughout both flights performed on January 25th. This flight log data has proven reliable enough to allow for its use in the simulation of flights used in other verification tests. GPS data was verified to have been highly accurate, and within ~5 meters of GPS coordinates provided by mobile devices, and altimeters. Altitude measurements were within $\pm$50 ft of altimeters. Temperature data showed that the WARHEAD was reading temperatures higher than reported by local weather services, but were likely influenced by the ventilation fan not having been implemented prior to launch. The objective of gaining flight data to be used for further testing was accomplished.



(a) WARHEAD Data Collection Flight recovery.

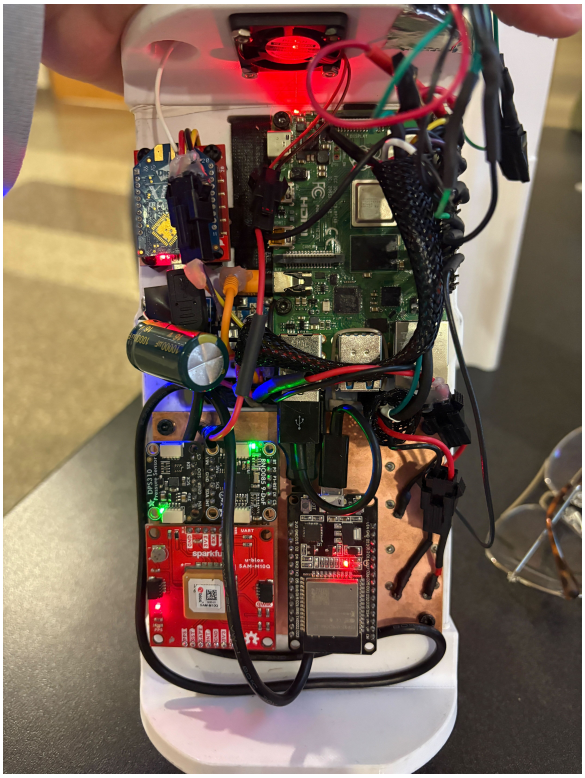

(b) WARHEAD prototype.

Figure 8.13: WARHEAD recovery and prototype images from the data collection flight.

state_name	received_message	timestamp	voltage	ambientTemperature	ambientPressure	pressureAlt	estCompensatedAcc	estCompensatedAcc	estCompensatedAcc	estAngularRateX	estAngularRateY	estAngularRateZ	magneticFieldX
S	No Message Receive	71333	0	14.25469208	1029.14856	-131.5336304	0.109375	-9.56640625	0.49609375	0	0	0	-21.937
S	No Message Receive	71348	0	14.25469208	1029.14856	-131.5336304	0.109375	-9.60546875	0.49609375	0	0	0	-21.937
S	No Message Receive	71378	0	14.25469208	1029.14856	-131.5336304	0.03125	-9.56640625	0.49609375	0	0	0	-21.562
S	No Message Receive	71402	0	14.25469208	1029.14856	-131.5336304	0.0703125	-9.5625	0.45703125	0	0	0	-21.562
S	No Message Receive	71434	0	14.25469208	1029.15332	-131.5723572	0.18359375	-9.56640625	0.41796875	0	0	0	-21.562
S	No Message Receive	71454	0	14.25469208	1029.15332	-131.5723572	0.22265625	-9.5625	0.45703125	0	0	0	-21.562
S	No Message Receive	71484	0	14.25469208	1029.15332	-131.5723572	0.22265625	-9.5625	0.41796875	0	0	0	-21.562
S	No Message Receive	71504	0	14.25469208	1029.15332	-131.5723572	0.18359375	-9.5234375	0.41796875	0	0	0	-21.562
S	No Message Receive	71533	0	14.25440979	1029.15332	-131.5723572	0.109375	-9.56640625	0.34375	0	0	0	-21.437
S	No Message Receive	71548	0	14.25440979	1029.15332	-131.5723572	0.0703125	-9.5625	0.37890625	0	0	0	-21.62
S	No Message Receive	71589	0	14.25440979	1029.15332	-131.5723572	0.0703125	-9.6015625	0.41796875	0	0	0	-22.562
S	No Message Receive	71619	0	14.25440979	1029.145508	-131.5088043	0.14453125	-9.56640625	0.45703125	0	0	0	-22.12
S	No Message Receive	71649	0	14.25440979	1029.145508	-131.5088043	0.109375	-9.56640625	0.45703125	0	0	0	-22.12
S	No Message Receive	71677	0	14.25440979	1029.145508	-131.5088043	0.109375	-9.60546875	0.49609375	0	0	0	-22.12
S	No Message Receive	71698	0	14.25440979	1029.145508	-131.5088043	0.03125	-9.60546875	0.45703125	0	0	0	-20.62
S	No Message Receive	71742	0	14.2452774	1029.144531	-131.4998627	0.18359375	-9.60546875	0.49609375	0	0	0	-22.437
S	No Message Receive	71774	0	14.2452774	1029.144531	-131.4998627	0.14453125	-9.5234375	0.45703125	0	0	0	-22.437
S	No Message Receive	71802	0	14.2452774	1029.144531	-131.4998627	0.109375	-9.5625	0.3046875	0	0	0	-21.187
S	No Message Receive	71870	0	14.2452774	1029.149902	-131.5445557	0.109375	-9.5234375	0.37890625	0	0	0	-21.187
S	No Message Receive	71900	0	14.2452774	1029.149902	-131.5445557	0.109375	-9.60546875	0.41796875	0	0	0	-21.187
S	No Message Receive	71927	0	14.2452774	1029.149902	-131.5445557	0.14453125	-9.56640625	0.53515625	0	0	0	-21.187
S	No Message Receive	71951	0	14.24755859	1029.150024	-131.5455475	0.0703125	-9.5625	0.41796875	0	0	0	-21.187
S	No Message Receive	71984	0	14.24755859	1029.150024	-131.5455475	0.0703125	-9.5625	0.45703125	0	0	0	-21.187
S	No Message Receive	71997	0	14.24755859	1029.150024	-131.5455475	0.14453125	-9.60546875	0.53515625	0	0	0	-21.87
S	No Message Receive	72046	0	14.24755859	1029.148804	-131.535614	0.109375	-9.56640625	0.45703125	0	0	0	-21.87
S	No Message Receive	72075	0	14.24755859	1029.148804	-131.535614	0.0703125	-9.5625	0.41796875	0	0	0	-21.87
S	No Message Receive	72101	0	14.24755859	1029.148804	-131.535614	0.109375	-9.5234375	0.41796875	0	0	0	-21.87
S	No Message Receive	72133	0	14.24755859	1029.148804	-131.535614	0.109375	-9.56640625	0.34375	0	0	0	-21.87
S	No Message Receive	72147	0	14.24984741	1029.148926	-131.5366058	0.18359375	-9.56640625	0.37890625	0	0	0	-21.87
S	No Message Receive	72188	0	14.24984741	1029.148926	-131.5366058	0.14453125	-9.56640625	0.45703125	0	0	0	-21.187
S	No Message Receive	72208	0	14.24984741	1029.148926	-131.5366058	0.0703125	-9.5625	0.45703125	0	0	0	-21.812
S	No Message Receive	72242	0	14.24984741	1029.148926	-131.5366058	0.14453125	-9.56640625	0.41796875	0	0	0	-21.812
S	No Message Receive	72256	0	14.24984741	1029.156372	-131.5971832	0.14453125	-9.56640625	0.45703125	0	0	0	-21.812
S	No Message Receive	72282	0	14.24984741	1029.156372	-131.5971832	0.109375	-9.56640625	0.45703125	0	0	0	-21.812
S	No Message Receive	72304	0	14.24984741	1029.156372	-131.5971832	0.14453125	-9.60546875	0.45703125	0	0	0	-21.812

Figure 8.14: WARHEAD Data Collection Flight logs.

8.2.2 WARHEAD Simulated Flight Transmission Test

The WARHEAD Simulated Flight Transmission Test verified the reliability of the finite state machine using prior flight data, obtained through the WARHEAD Data Collection Flight Test. This data enabled simulations to be conducted without an actual flight. The specific conditions for transitioning through various states were fine-tuned to match the payload setup. The simulations were performed in a controlled environment, where the WARHEAD's only function was transmission.

Table 8.20: WARHEAD flight simulation transmission test success criteria.

Success Criteria	Status
Payload computers properly identify various states of the Launch Vehicle's flight	Verified
Payload transmits data for less than 5 minutes after landing, determined autonomously	Verified
Payload transmits the desired data points	Verified

Controllable Variables

- Previous flight data source
- WARHEAD software
- WARHEAD configuration
- State transition requirements
- Transmission format and duration
- Flight/physical forces on WARHEAD

Required Facilities, Equipment, Tools, and Software

- WARHEAD and all associated subsystems
  - SWITCH transmission subsystem
  - FUSE data collection subsystem
  - CHARGE power distribution subsystem
- Previous flight data in .xlsx/.xls format
- Windows/Linux laptop for TORCH/WARHEAD ground station
  - 2M radio receiver
  - BTECH APRS cable
  - Ground station XBee Pro S3B
  - Direwolf software

Methodology

1. Assemble the WARHEAD in a controlled environment, with FUSE data collection subsystem and SWITCH transmission subsystem.
2. Configure the WARHEAD to read data from a previously logged flight, as opposed to live sensor data.

3. Initialize the WARHEAD to begin reading the previous flight data and progressing between flight states according to the previous flight data.
4. Note which points in the data result in the state machine progressing, and verify that the behavior is expected
5. Wait until the previous flight data reaches the point where the Launch Vehicle has landed to verify that it begins transmitting.
6. Ensure that transmission begins and concludes within the 5 minutes allotted period, without the need for manual overrides.
7. Read and record the transmitted signal via the 2M radio receiver connected to the TORCH ground station.
8. Inspect the transmitted data for accuracy by comparing it against manual analysis of the previous flight data.

Results

Through the use of the January 25th flight data, the transmission simulation test was able to be performed. As the simulation progressed through the data contained within the data collection flight file, the stages progressed as expected. Included below is a table of the time of approximate state changes w/ respect to the time of takeoff.

- Motor Burn: 0:01s
- Coast: 0:03s
- Free-fall: 0:17s
- Landed/Transmission: 0:49s
- Recovery: 3:49s

Note that in the above data, the WARHEAD used a shortened transmission period that may not reflect the period used during the competition.

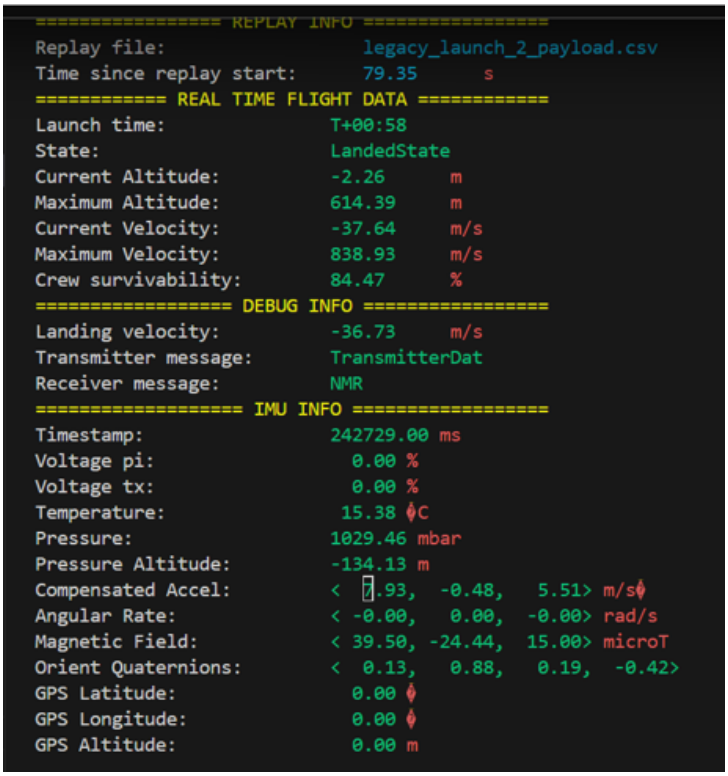

Figure 8.15: Simulated Flight transmission UI output.

8.2.3 WARHEAD Remote Override Test

The WARHEAD Remote Override System was verified by initializing the WARHEAD and manually advancing or reversing the finite state machine. This ensured that the remote override functioned as intended and allowed the WARHEAD to be controlled remotely. The test was conducted with the WARHEAD and all associated subsystems fully assembled.

Table 8.21: WARHEAD Remote Override Test success criteria.

Success Criteria	Status
Remote override command successfully jumps from all pre-transmission states to transmission state	Verified
Remote override command successfully jumps from recovery state to transmission state	Verified
Remote override command successfully jumps from transmission state to shutdown state	Verified

Controllable Variables

- Previous flight data source
- WARHEAD configuration
- WARHEAD software state that is interrupted
- TORCH ground station configuration

Required Facilities, Equipment, Tools, and Software

- WARHEAD and all associated subsystems
  - SWITCH transmission subsystem
  - FUSE data collection subsystem
- Previous flight data in .xlsx format
- TORCH ground station
  - 2M radio receiver
  - BTECH APRS cable
  - TORCH ground station XBee Pro S3B
  - XCTU software

Methodology

1. Assemble the WARHEAD in a controlled environment, with FUSE data collection subsystem and SWITCH transmission subsystem.
2. Configure the TORCH ground station in order to transmit RF commands and begin monitoring APRS data on the 2M band.
3. Initialize payload software to begin simulating a flight using the prior flight data.
4. Upon reaching the desired state to be overridden, use the FUSE ground station to send an override command, which will be received by the XBee.
5. Use the FUSE ground stations 2M radio receiver to monitor for any transmission, or lack of transmission, depending on the desired override.
6. Shutdown and review the WARHEAD's data logs to ensure the payload received commands as expected.

Results

The STEMCRaFT was able to successfully receive override commands at each of the desired states, and progressed to either the shutdown/transmission state as expected. After entering the transmission state due to a remote override, the transmission successfully ended within the desired sub-5 minute time period.

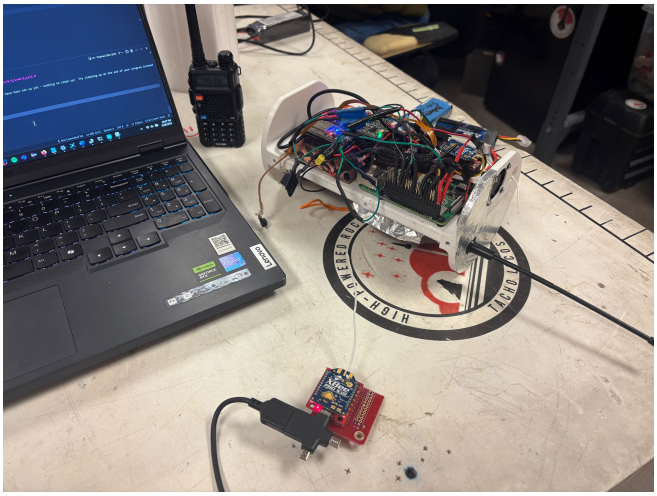

(a) Simulated Flight Transmission experimental setup.

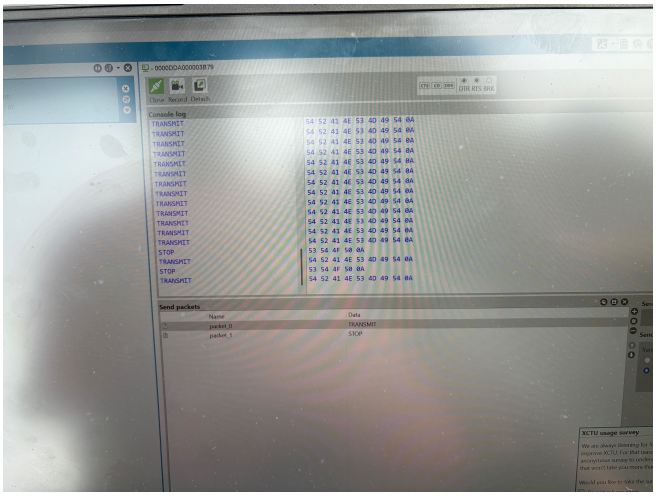

(b) Ground station XCTU software setup.

Figure 8.16: Experimental setup and XCTU software configuration for simulated flight transmission testing.

8.2.4 WARHEAD Data Transmission Verification

The WARHEAD data transmission was verified by transmitting an APRS message in the desired packet format from the WARHEAD. This test ensured that the SWITCH transmission subsystem could encode and broadcast a data packet containing the required information. An individual data packet, generated from simulated flight data, was used to evaluate the encoding and receiving process.

The TORCH ground station was also tested for its ability to receive and decode an APRS packet. TORCH was used to verify the format and integrity of the APRS data and to confirm that the transmission was received in the desired format.

Table 8.22: WARHEAD Data Transmission Verification success criteria.

Success Criteria	Status
WARHEAD is able to encode the data packet properly into an APRS signal	Verified
WARHEAD is able to broadcast the encoded APRS signal using the SWITCH subsystem	Verified
TORCH is able to receive transmitted data	Verified
TORCH is able to decode the APRS signal properly	Verified
APRS signal contains all 8 declared data points and WARHEAD GPS coordinates	Verified
Decoded data points match the data contained within the original data packet	Verified

Controllable Variables

- APRS data packet contents
- TORCH ground station decoding software configuration (Direwolf)
- SWITCH subsystem configuration
  - Power level of SA858 transmitter
  - SA858 transmitter settings
  - SWITCH subsystem software (Direwolf)
- Distance between WARHEAD and TORCH ground station
- Obstruction between WARHEAD and TORCH ground station

Required Facilities, Equipment, Tools, and Software

- WARHEAD and all associated subsystems
  - SWITCH transmission subsystem
  - FUSE data collection subsystem
- SWITCH data packet pulled from previous flight data
- TORCH ground station
  - Windows/Linux Laptop
  - Visual Studio Code
  - 2M radio receiver
  - BTECH APRS cable
  - Direwolf Software

Methodology

1. Assemble the WARHEAD in a controlled environment with FUSE data collection subsystem and SWITCH transmission subsystem.
2. Configure the 2M radio receiver to begin listening on the 144.390MHz frequency and connect to the TORCH ground station via BTECH APRS cable.
3. Initialize the Direwolf software with logging enabled and ensure Direwolf is listening to the the 2M radio audio input.
4. Connect to the WARHEAD remotely, configure the transmission testing program to utilize the desired data packet, and initialize the testing program.
5. Monitor received APRS transmissions via the TORCH ground station.
6. After APRS message is decoded, inspect decoded data and verify that the transmission matches the original data packet.

Results

The TORCH ground station was able to successfully receive the broadcast signal and decode the APRS message. Upon verification, each transmission matched the data contained within the data packet, and all 8 data points were contained within the APRS packet. The results of this verification test indicate the ability of the SWITCH transmission subsystem to properly encode and broadcast data in the desired format.

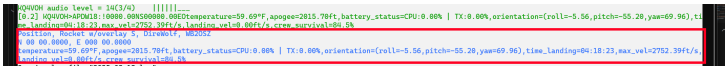

Figure 8.17: Decoded APRS data received by ground station.

8.2.5 WARHEAD Power Supply Verification Test

The CHARGE subsystem's ability to provide power for extended periods was evaluated. According to NASA requirements, the battery capacity needed to sustain the WARHEAD for 3+ hours on the launch pad.

The test involved the WARHEAD remaining in standby (launch pad) state until either the battery levels reached the minimum allowable threshold or the target time was achieved.

The voltage of both WARHEAD batteries was measured at the start and end of the test to verify the results.

Table 8.23: WARHEAD Power Supply Verification Test success criteria.

Success Criteria	Status
WARHEAD remains operational for 3+ hours after initialization and while in standby state	Verified
Battery levels of both WARHEAD LiPos remain above the recommended minimum operating level	Verified

Controllable Variables

- WARHEAD software
- Initial CHARGE subsystem LiPo battery charge levels
- Individual electronic power settings
  - DPS310
  - BNO085
  - SAM-M10Q GPS
  - Onboard Fan
- Duration of the verification test
- Minimum acceptable battery voltage

Required Facilities, Equipment, Tools, and Software

- WARHEAD and all associated subsystems
  - SWITCH transmission subsystem
  - FUSE data collection subsystem
  - CHARGE power subsystem
- LiPo battery charging station
- Multimeter
- Windows/Linux laptop connected to WARHEAD
  - Visual Studio Code

Methodology

1. Verify the charge levels of both LiPo batteries located within the WARHEAD. The 4S LiPo should read 16.8V, and the 2S LiPo should read 8.4V. Note the beginning charge level prior to initializing the software.
2. Assemble the WARHEAD in a controlled environment, with FUSE data collection subsystem, SWITCH transmission subsystem, and CHARGE power subsystem.
3. Initialize main flight program of the WARHEAD and confirm that the WARHEAD remains in the standby state throughout the test.
4. Allow the software to run with full power draw and all electronics operational.
5. When battery levels drop below manufacturer recommended voltage, terminate the WARHEAD software and confirm that batteries remain above the manufacturer recommended minimum voltage.
6. Note final charges and record time that WARHEAD software was active.

Results

This test was successful. The WARHEAD remained in a standby state with all electronics operational for well over the target 3-hour duration.

Before the test, the 4S and 2S LiPo batteries measured 16.84V and 8.28V, respectively. After 3 hours and 4 minutes, the WARHEAD remained functional, with battery voltages recorded at 14.07V and 7.52V. The pre-test minimum allowable voltages were 12V and 6V, respectively. The WARHEAD software estimated the remaining battery capacity at 40.16% for the 4S LiPo and 57.97% for the 2S LiPo at the conclusion of the test.

One factor to note is that the initial rundown software was terminated after approximately 2 hours of standby. However, between this early termination and the successful 3-hour, 4-minute test, the batteries were not recharged, as the test was restarted immediately. Based on this data, not only did the battery capacity meet the required levels, but it likely exceeds them significantly in a continuous test.

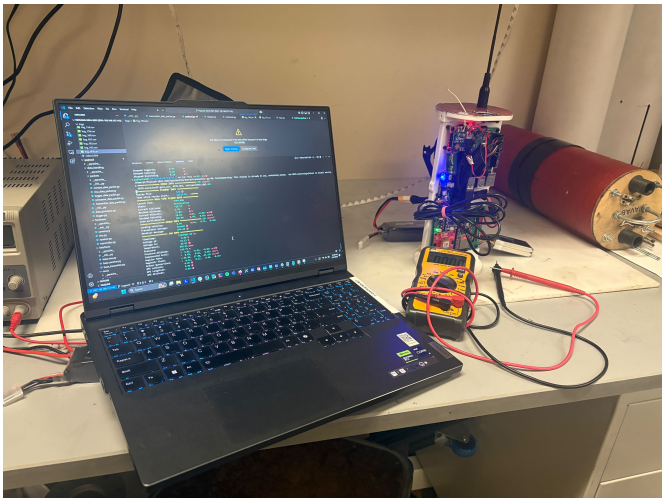

(a) Power Supply Verification Test experimental setup.

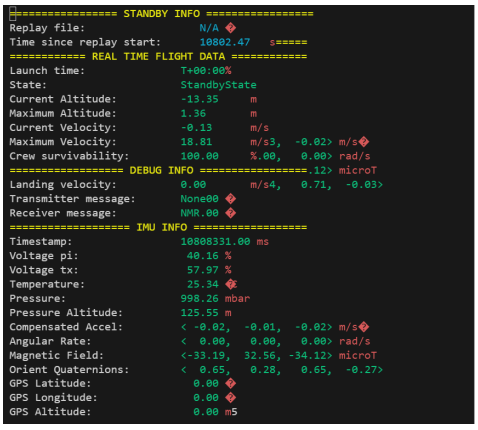

(b) Battery level as recorded by WARHEAD software at 3 hours.

Figure 8.18: Power Supply Verification Test and Battery level recording after 3 hours.

8.2.6 WARHEAD Transmission Range Test

The WARHEAD Transmission Test evaluated transmission capabilities over long distances, simulating the maximum expected recovery drift distance, as defined in Section 3.7.8.

This test was conducted over a 2,145.4 ft relatively flat path to replicate the expected obstructions and distances encountered during the competition launch. Instead of transmitting flight data, a simple APRS signal was used to focus solely on range testing.

The target range of 2,145.4 ft was set to match the maximum expected drift distance and exceed the expected maximum drift distance as defined in TDR PD.8.

Table 8.24: WARHEAD Transmission Range Test success criteria.

Success Criteria	Status
WARHEAD transmission is audible and received at or over a 550-meter distance	Verified
WARHEAD APRS message is deciphered at or over a 550-meter distance	Verified

Controllable Variables

- Transmitter power output
- Transmitter battery voltage
- Antenna orientation/polarization and placement
- Distance between TORCH ground station and WARHEAD
- TORCH ground station radio receiver strength
- Orientation of Nose Cone
- Amount of ballast in Nose Cone
- Placement of RF shielding within WARHEAD

Required Facilities, Equipment, Tools, and Software

- WARHEAD and all associated subsystems mounted within Nose Cone
  - SWITCH transmission subsystem
  - FUSE data collection subsystem
  - CHARGE power subsystem
- Windows/Linux laptop connected to TORCH ground station
  - Direwolf software
  - 2M radio receiver
  - BTECH APRS cable
- Windows/Linux laptop connected to WARHEAD
  - Visual Studio Code
- 2X mobile phones with GPS
- Camera for documentation

Methodology

1. Assemble the WARHEAD with FUSE data collection subsystem and SWITCH transmission subsystem.
2. Insert the WARHEAD into the Nose Cone and retain using bulkhead and 1/4ḧardware
3. Ensure that the transmission battery(2S LiPo) is fully charged to 8.4V to confirm transmission strength.
4. Using the WARHEAD laptop, remotely connect to the WARHEAD to trigger transmissions as necessary.
5. Connect the TORCH ground station laptop to the receiver radio, via the BTECH APRS cable, and ensure the receiver is set to receive on the 144.390MHz frequency.
6. Initialize the Direwolf software and ensure it is receiving audio from the configured 2M radio receiver.
7. With the TORCH ground station near the WARHEAD, send a test transmission to verify the ground station is configured properly. This APRS transmission should be received and decoded.
8. Begin moving the WARHEAD and the ground station apart while periodically triggering APRS transmissions.
9. Continue to increase the distance until the transmission is no longer received or the desired distance is reached.
10. Once the final position of the WARHEAD and ground station is reached, log the approximate location using the current GPS location on a mobile phone.
11. Determine the final distance using the GPS coordinates of both stations.
12. Repeat the test with the WARHEAD both ballasted and un-ballasted to ensure the ballast has negligible effect on the transmission.

Results

This test was successful. During the range test, the WARHEAD APRS transmission was successfully received at distances up to 2165 ft (660 m), as determined by GPS coordinates. At this range, transmissions were received and decoded in both the ballasted and un-ballasted configurations.

This range meets the team-declared requirements, which are based on the maximum expected drift distance of the full-scale launch vehicle.



Figure 8.19: Final transmission distance.

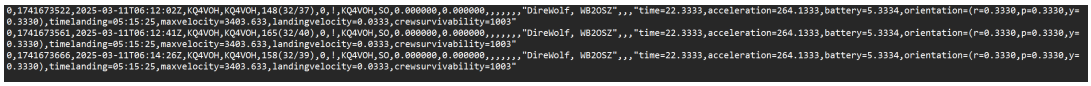

Figure 8.20: APRS signal received at ground station.

8.2.7 WARHEAD Antenna Polarization Test

The WARHEAD Antenna Polarization Test was conducted alongside the WARHEAD Transmission Test to evaluate the effects of antenna orientation on WARHEAD's transmission capabilities. At the designated testing distance (2145.4 ft.), test transmissions were sent with the WARHEAD in multiple orientations. The results were logged and analyzed to assess the impact of antenna polarization on transmission performance.

Table 8.25: WARHEAD Antenna Polarization Test success criteria.

Success Criteria	Status
WARHEAD transmission is clear and received at or over 2154.4ft distance while oriented parallel to receiver	Verified
WARHEAD transmission clear and received at or over 2154.4ft distance while oriented perpendicularly to the ground station and vertical to the ground.	Verified
WARHEAD transmission clear and received at or over 2154.4ft distance while oriented perpendicularly to the ground station and horizontal to the ground.	Verified

Controllable Variables

- Transmitter power output
- Transmitter battery voltage
- Antenna orientation/polarization and placement
- Distance between TORCH ground station and WARHEAD
- TORCH ground station radio receiver strength
- Orientation of Nose Cone
- Orientation of 2M radio receiver
- Amount of ballast in Nose Cone
- Placement of RF shielding within WARHEAD

Required Facilities, Equipment, Tools, and Software

- WARHEAD and all associated subsystems mounted within Nose Cone
  - SWITCH transmission subsystem
  - FUSE data collection subsystem
  - CHARGE power subsystem
- Windows/Linux laptop connected to the TORCH ground station
  - Direwolf software
  - 2M radio receiver
  - BTECH APRS cable
- Windows/Linux laptop connected to WARHEAD
  -
  - Visual Studio Code
- 2X mobile phones with GPS
- Camera for documentation

Methodology

1. Assemble the WARHEAD with FUSE data collection subsystem and SWITCH transmission subsystem.
2. Insert the WARHEAD into the Nose Cone and retain it using the Nose Cone bulkhead and 1/4ẗhardware.
3. Using the WARHEAD laptop, remotely connect to the WARHEAD in order to trigger transmissions as necessary.
4. Connect the ground station laptop to the 2M handheld and ensure the handheld is on the 144.390MHz.
5. Initialize the Direwolf software and ensure it is receiving audio from the 2M handheld radio.
6. Set up the WARHEAD and ground station at the desired (2145.4 ft.) distance with minimal obstructions.
7. Begin transmitting the sample APRS data at the various orientations to test the desired polarization.
8. Rotate the WARHEAD between the specified parallel, perpendicular and vertical, and perpendicular and horizontal orientations.
9. Ensure that the APRS signal is received and decoded properly in each of the orientations before progressing to the next orientation.
10. Note any orientations that have a weaker signal or send a transmission that is not properly decoded.
11. Repeat the test with the WARHEAD both ballasted and un-ballasted to ensure the ballast has minimal effect on the transmission.

Results

The test was successful. At each of the orientations tested, the WARHEAD successfully transmitted a signal that was received and decoded by the ground station at a distance of 2165 ft (660 m). The signal was noticeably weaker when transmitting in the perpendicular and horizontal orientation, but it remained reliable and was successfully decoded numerous times.

At the target range, the ground station was able to receive transmissions at all tested antenna polarizations. Performance may improve further with a more powerful ground station, such as the one being used during the competition flights in Huntsville, but was sufficient with the TORCH ground station.

8.2.8 WARHEAD FUSE Data Collection Rate Test

The WARHEAD FUSE Data Collection Rate Test was conducted to evaluate the data collection capabilities of the FUSE subsystem. This test was performed in multiple configurations to assess the impact of various sensor failures on the data collection rate.

A modified version of the WARHEAD software was used to monitor the frequency of data packets throughout testing.

According to team derived requirements TDR.PF12 and TDR.PF13, the target data collection rate was 15 samples per second, both under normal operation and in the presence of sensor failures.

Table 8.26: WARHEAD FUSE Data Collection Rate Test success criteria.

Success Criteria	Status
FUSE subsystem obtains data at a minimum of 15 samples per second with all sensors functional.	Verified
Fuse subsystem remains able to collect data points at 15 samples per second in the case of a failed sensor	Verified

Controllable Variables

- FUSE subsystem software
- Sensor calibration/configuration
- WARHEAD software for reading FUSE data
- Sensors connected and sensors disconnected

Required Facilities, Equipment, Tools, and Software

- WARHEAD and all powered subsystems
  - FUSE data collection subsystem
  - CHARGE power subsystem
- LiPo battery charging station
- Multimeter
- Windows/Linux laptop connected to WARHEAD
  - Visual Studio Code
  - Data packet frequency monitoring software

Methodology

1. Assemble the WARHEAD with all subsystems properly connected.
2. Connect to the WARHEAD remotely using a Windows/Linux laptop.
3. Initialize the FUSE data collection frequency program.
4. Monitor the reported update rate with all sensors connected.
5. With the software actively running, monitor the reported update rate while disconnecting and reconnecting various sensors.
6. Document the reported update rates with different configurations of sensors connected/disconnected
7. Ensure that sensors begin returning data again after being disconnected and reconnected
8. After verifying the desired configurations, disconnect the payload and note any configurations that failed.

Results

The test was successful. While running the FUSE data collection frequency program, the normalized frequency output ranged from 123 Hz to 127 Hz, far exceeding the previously outlined requirements.

This rate remained relatively stable, with only minor drops occurring when an individual sensor was disconnected. The lowest recorded data packet frequency was ~113 Hz, which occurred when the FUSE subsystem briefly failed to obtain a data point due to a sensor disconnection.

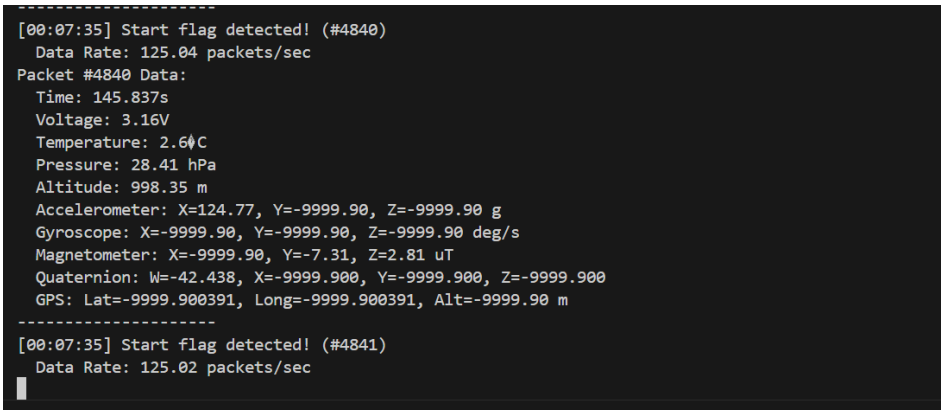

Figure 8.21: Terminal output during data packet frequency program.

8.2.9 WARHEAD Remote Override Range Test

The WARHEAD Remote Override Range Test evaluated the RF capabilities of the remote override system over long distances, simulating the maximum expected recovery drift distance, as defined in Section 3.7.8. The overall setup of this VV&T test closely resembled that of the WARHEAD Transmission Range Test.

This test was conducted over a 2,000-ft, relatively flat path to replicate the expected obstructions and distances encountered during the competition launch. Instead of transmitting flight data, a simple APRS signal was used to focus solely on range testing.

The target range of 2,000 ft was set to match the maximum expected drift distance and exceed the expected maximum drift distance defined in TDR PD.8.

Table 8.27: WARHEAD Remote Override Range Test success criteria

Success Criteria	Status
Remote Override commands are received at or over a 2000ft distance	Verified
XBee antenna polarization does not interfere with remote override capabilities at 2000ft distance	Verified

Controllable Variables

- Configuration of TORCH ground station XBee
- Configuration of WARHEAD XBee
- WARHEAD software
- TORCH ground station software
- Orientation of WARHEAD
- Orientation of TORCH ground station
- Distance between TORCH and WARHEAD
- EMF obstruction between TORCH and WARHEAD
- Override signal transmission frequency

Required Facilities, Equipment, Tools, and Software

- Windows/Linux ground station laptop
  - XCTU
  - TORCH ground station XBee
- Windows/Linux WARHEAD laptop
  - Visual Studio Code
- Fully assembled Nose Cone with WARHEAD fully mounted inside
- 2x mobile phones with GPS
- Camera for documentation

Methodology

1. Assemble the WARHEAD and all internal electronics within the housing.
2. Assemble the Nose Cone, securing the WARHEAD inside using the retention system.
3. Using the WARHEAD laptop, remotely connect to the WARHEAD to begin monitoring for override signals.
4. Using the TORCH ground station laptop, configure the ground station to begin periodically broadcasting an XBee signal using XCTU.
5. With the ground station near the WARHEAD, send a test transmission to verify that the ground station is configured properly.
6. Begin moving the WARHEAD and TORCH ground station apart while ensuring that the override commands are still being received by the WARHEAD.
7. Continue to increase distance until the override signal is no longer received or the desired distance is reached.
8. Once the final position of the WARHEAD and ground station is reached or signals are no longer being received, log the approximate location using the current GPS location on a mobile phone.
9. Determine the final distance using the GPS coordinates of both stations.

Results

The WARHEAD successfully received TORCH ground station override commands at distances up to 2088.90 ft, exceeding the 2000-ft target. This distance falls slightly below the maximum expected drift distance, as defined in Section 3.7.8.

At this range, line-of-sight obstructions appeared to be the primary limiting factor rather than signal strength. Despite this, the test met the required verification distance and is expected to exceed any distances encountered during the competition launch in Huntsville.



(a) TORCH experimental setup.

(b) WARHEAD experimental setup.

Figure 8.22: WARHEAD Remote Override experimental setup.



Figure 8.23: WARHEAD Remote Override GPS distance.

8.2.10 WARHEAD Vacuum Chamber Test

The WARHEAD Vacuum Chamber Test was conducted to evaluate the electronics and software of the WARHEAD using real-time sensor data rather than previously recorded flight data. This test ensured that the WARHEAD operated as expected and could handle imperfect or unexpected data that may not have been encountered in prior flights.

The test involved fully assembling the WARHEAD and placing it inside a vacuum chamber, where the pressure was rapidly reduced to trigger various states of the finite state machine (FSM).

Table 8.28: WARHEAD Vacuum Chamber Test success criteria

Success Criteria	Status
The WARHEAD successfully progresses through the finite state machine as the vacuum is applied	Verified
The WARHEAD successfully transmits the data collected during the vacuum chamber simulated flight	Verified
The WARHEAD successfully delays transmission upon reaching the landed state	Verified

Controllable Variables

- WARHEAD software version and configuration
- Vacuum chamber pressure levels
- Vacuum chamber seal
- Duration of WARHEAD exposure to vacuum

Required Facilities, Equipment, Tools, and Software

- Windows/Linux laptop connected to WARHEAD
  - Visual Studio Code
  - Direwolf Software
  - 2M radio receiver
- Fully assembled WARHEAD with all subsystems:
  - SWITCH transmission subsystem
  - FUSE data collection subsystem
  - CHARGE power subsystem
- Windows/Linux laptop connected to TORCH ground station
  - 2M radio receiver

- BTECH APRS cable
- Direwolf software

Methodology

1. Assemble the WARHEAD and all internal electronics within the housing.
2. Using the WARHEAD laptop, remotely connect to the WARHEAD and initialize the WARHEAD flight software.
3. Connect the 2M radio receiver to the WARHEAD laptop via the BTECH APRS cable
4. Configure Direwolf to begin receiving from the 2M radio, and begin a log file to record any received APRS transmissions.
5. Place the WARHEAD within the vacuum chamber and place the lid on top of the chamber to seal it. Plug any leaks with plumbers putty if necessary.
6. Switch the vacuum chamber on to begin reducing the pressure of the chamber.
7. Allow the chamber to fully reduce pressure, and then switch off the vacuum.
8. Begin monitoring for the APRS transmission that should begin shortly after the chamber returns to a normal pressure.

Results

Successful. The pressurization of the chamber successfully triggered a burn phase using the finite state machine. During the pressurized period the WARHEAD successfully logged the ambient data, including minor orientation changes due to bumping the vacuumed chamber.

Upon returning the vacuum chamber to normal pressure levels, the state machine successfully progressed to the landing state. After a brief delay, the WARHEAD began transmitting the simulated flight data using the APRS format, and the TORCH ground station successfully decoded this data. Upon analyzing this data, the received data matched the anticipated data packet.



(a) WARHEAD experimental setup.

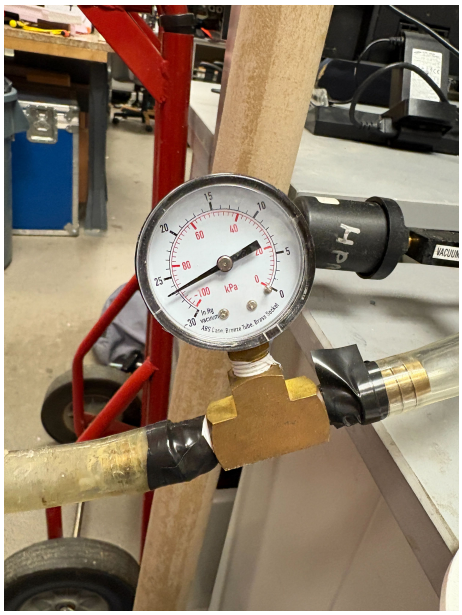

(b) Vacuum Chamber gauge and valve.

Figure 8.24: WARHEAD Vacuum Chamber Test experimental setup.

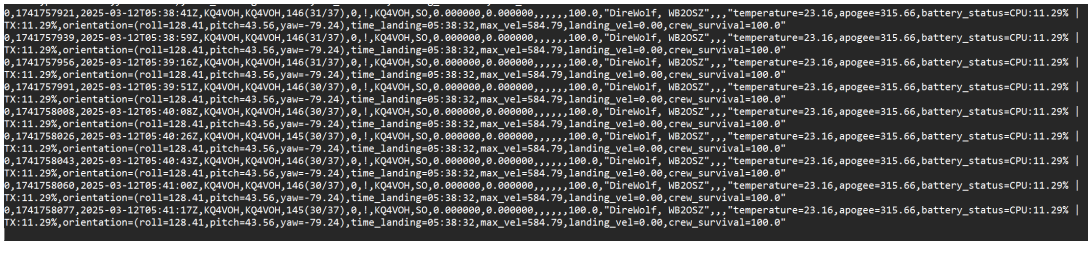

Figure 8.25: Vacuum Chamber APRS transmission received by ground station.

8.2.11 Nose Cone with STEMCRaFT Impact Test

The Nose Cone impact test simulated the ground impact of the Nose Cone assembly, including the STEMCRaFT, under the main parachute at the end of a flight through drop testing. This test assessed the structural integrity of the Nose Cone, STEMCRaFT, and payload retention system. The objective was to verify that the STEMCRaFT and its electronics remained fully operational and undamaged, with no loosening or disconnection of components.

Table 8.29: Nose Cone impact test success criteria.

Success Criteria	Status
Nose Cone structure suffers no damage	Verified
STEMCRaFT housing suffers no damage	Verified
STEMCRaFT remains secured inside the Nose Cone	Verified
No internal electronics become loose or disconnected	Verified
Electronics remain operational throughout the test	Verified

Controllable Variables

- Nose Cone weight
- Drop height
- Impact angle
- Impact surface type
- Drop methodology

Required Facilities, Equipment, Tools, and Software

- Drop test stand
- Fully assembled Nose Cone with STEMCRaFT inside
- Tape measure
- Scale
- Safety glasses
- Camera for documentation

Methodology

1. Assemble the STEMCRaFT and power on all of the internal electronics.
2. Assemble the Nose Cone, securing the STEMCRaFT inside using the retention system.
3. Measure the total mass of the assembled Nose Cone.
4. Affix additional ballast to simulate full Nose Cone mass if necessary.
5. Use kinematic equations to calculate the drop height needed to achieve 75 ft-lbs of kinetic energy with the Nose Cone mass.
6. Attach a length of cord to the U-bolt on the Nose Cone, threading the remaining cord through the test stand rail eye-bolt.
7. Mark the required cord length corresponding to the drop height with masking tape.
8. Set up the test stand and ensure stability.
9. Clear the impact area and position all observers at a safe distance.
10. Slowly raise the Nose Cone to the required height.
11. Begin recording with a camera.
12. Release the cord, allowing the Nose Cone to free-fall and impact the ground.
13. Visually inspect the Nose Cone for damage.
14. Verify the functionality of all electronics in the STEMCRaFT.
15. Remove the Nose Cone bulkhead and inspect the STEMCRaFT for damage or displacement.
16. Disassemble the STEMCRaFT and inspect the electronic components and STEMnauts for damage or displacement.
17. Repeat the test as necessary to cover different impact angles and scenarios.

Results

The Nose Cone and STEMCRaFT successfully withstood the drop test without sustaining structural damage. Immediately after impact, the STEMCRaFT's electronic components were inspected and confirmed to be fully operational. The STEMCRaFT was then detached from the Nose Cone for further examination, with all electronics remaining securely fastened to the sled.



(a) Nose Cone suspended before being dropped.



(b) Code showing electronics still operational after Nose Cone drop test.

Figure 8.26: Nose Cone with STEMCRaFT drop test images.

8.2.12 Camera Logging Endurance Test

The Camera Logging Endurance Test evaluates the performance and storage efficiency of an Arducam module integrated with a Raspberry Pi 4 during an extended 3-hour recording, simulating prolonged launch or mission conditions. The Arducam, connected directly to the Raspberry Pi 4's camera port, records 1080p video at 1920×1080 resolution for 180 minutes, splitting files into 5-minute segments using the `rpicam-vid` command. The test confirms the system's ability to continuously record without data corruption or exceeding the 256GB SD card's capacity. Storage usage is estimated at approximately 2MB/s, resulting in 21.6GB for 3 hours, reflecting a realistic bitrate for 1080p H.264 video under typical launch conditions.

Table 8.30: Camera logging endurance test success criteria.

Success Criteria	Status
Storage usage does not exceed 256GB card capacity for 3-hour recording	Verified
Video segments are split correctly every 5 minutes with no data loss	Verified
No corruption or dropped frames in recorded video	Verified

Controllable Variables

- Recording duration (set to 3 hours, 180 minutes)
- Segment length (set to 5-minute chunks)
- Video resolution (1920×1080)
- Auto white balance and flush settings
- Bitrate (approximately 16Mbps, yielding 2MB/s)

Required Facilities, Equipment, Tools, and Software

- Raspberry Pi 4
- Arducam module (plugged into Raspberry Pi 4 camera port)

- 256GB SD card
- `rpicam-vid` software for video capture
- Laptop for data analysis and file verification
- Launch video output directory (`launch_vids`)

Methodology

1. Connect the Arducam module to the Raspberry Pi 4 camera port and configure it with the proper commands
2. Ensure the `launch_vids` directory exists on the 256GB SD card.
3. 3-hour (180-minute) recording session, splitting output into 5-minute H.264 video segments.
4. Calculate storage usage
5. Verify each 5-minute segment is intact, with no dropped frames or corruption, by checking file integrity and playback.
6. Confirm total storage usage remains below the 256GB capacity.

Results

The simulated 3-hour recording consumed approximately 21.6GB of storage, based on a realistic 2MB/s bitrate (equivalent to 16Mbps) for 1080p H.264 video. This resulted in 36 five-minute segments (`launch0001.h264` to `launch0036.h264`), each approximately 600MB. File integrity checks confirmed no corruption or dropped frames across all segments, and the auto white balance maintained consistent video quality. With 21.6GB used out of 256GB, the test validates the Arducam and Raspberry Pi 4 system's capability to log extended mission footage reliably, utilizing less than 10% of the available storage capacity.

8.2.13 Air Brakes Deployment Test

The Air Brakes deployment test simulated the aerodynamic forces expected during flight by attaching weights to replicate drag. This test ensured that the fins could deploy properly and withstand flight conditions without structural failure. Verifying the fins' integrity was crucial to maintaining the stability and straight trajectory of the Launch Vehicle.

Table 8.31: Air Brakes deployment test success criteria success criteria.

Success Criteria	Status
Air Brakes fully deploy without stalling the servo	Verified
The servo does not pull more amps than a 4 cell LiPo can provide	Verified
The Air Brakes mechanism remains functional	Verified

Controllable Variables

- Method of simulating drag force
- Weight attachment points
- Servo selection in the Air Brakes assembly
- Air Brakes assembly design including gears, tolerances, and material choice

Required Facilities, Equipment, Tools, and Software

- Air Brakes system with test fins
- Weights
- Weight attachment method
- Power supply to measure the servo power draw
- Test stand
- Scale

Methodology

1. Assemble the Air Brakes system with the test fins.
2. Determine the expected drag force on the Air Brakes fins during flight.
3. Attach a flat plate to all four fins via string to rest weight on.
4. Add weight to the plate to simulate drag forces.
5. Inspect deployment mechanics and measure servo power draw during deployment.

Results

The Air Brakes system successfully deployed the fins under an additional 70 lb of applied weight, simulating the maximum expected force of approximately 17.5 lb per fin based on vehicle speed and drag estimations. This outcome surpassed expectations, as the force was applied as a point load at the fin tips rather than the distributed aerodynamic pressure they will experience in flight, giving a greater than 1 factor of safety



(a) Air Brakes mechanism during the deployment test.



(b) Weight used for the Air Brakes deployment test.

Figure 8.27: Airbrakes deployment test images.

8.2.14 Air Brakes Flight Simulation Test

The Air Brakes Flight Simulation Test assessed the performance and accuracy of the Weighted Height Judgment (WHJ) control system using flight log data from a previous launch. The WHJ system integrates an apogee prediction algorithm and a control algorithm to actuate the Air Brakes' servo-driven fins. This test used a script to mock the Inertial Measurement Unit (IMU) with historical flight data, simulating a real flight environment. The simulation evaluated the WHJ system's ability to predict apogee and deploy fins appropriately when the target altitude was set below the simulated apogee. The test validated prediction accuracy and control response without requiring a physical launch.

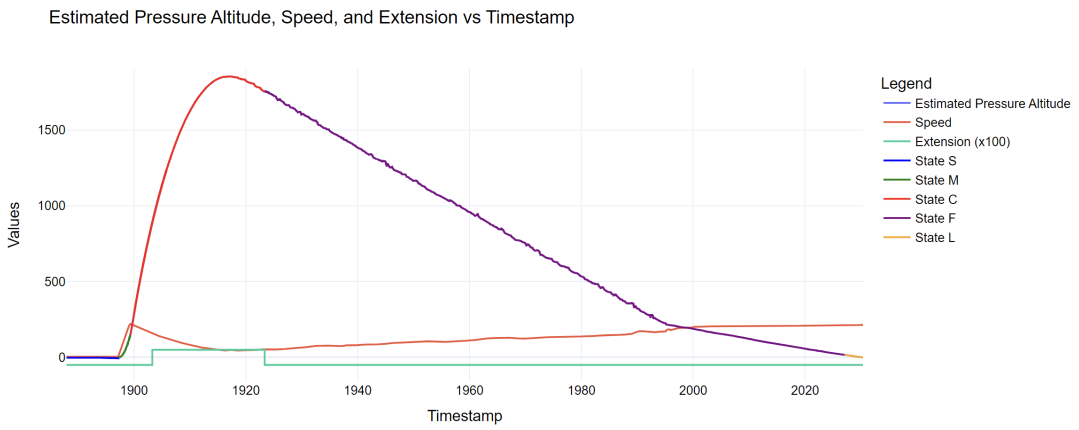

Figure 8.28: Image of example flight data.

Table 8.32: Air Brakes flight simulation test success criteria.

Success Criteria	Status
Apogee prediction matches previous flight apogee within 2%	Verified
Control system triggers fin deployment when target altitude is below predicted apogee	Verified

Controllable Variables

- Target altitude setpoint for airbrakes deployment
- Flight log data selection (specific launch conditions)
- IMU mock script parameters (sampling rate, data scaling)
- Airbrakes deployment logic thresholds

Required Facilities, Equipment, Tools, and Software

- Laptop or desktop computer
- Flight log data from a previous launch in CSV format
- WHJ system software (apogee prediction and control algorithms)
- IMU mocking script
- Data analysis tools

```
============== REPLAY INFO ==============
Replay file:                  pelicanator_launch_1.csv
Time since replay start:      8.51       s
============ REAL TIME FLIGHT DATA ============
Launch time:                  T+00:05
State:                        CoastState
Current velocity:             109.90     m/s
Max velocity so far:          167.64     m/s
Current height:               760.31     m
Max height so far:            760.31     m
Predicted Apogee:             1302.02    m
Airbrakes extension:          20         deg
================= DEBUG INFO =================
Average pitch:                    11.37      deg
Average acceleration:             -7.58      m/s^2
Convergence Time:                 2.82       s
Convergence Height:               639.09     m
Predicted apogee at Convergence:  1260.71    m
IMU Data Queue Size:              0          packets
Fetched packets in Main:          1          packets
Fetched packets from IMU:         N/A        packets
Log buffer size:                  0          packets
Invalid fields:                   None
============ REAL TIME CPU LOAD ============
Mock IMU Process            CPU Usage:   0.50%
Mock Logger Process         CPU Usage:   0.34%
MainProcess                 CPU Usage:   3.00%
Apogee Prediction Process   CPU Usage:   0.16%
```

Figure 8.29: Display of the simulated flight code running.

Methodology

1. Obtain flight log data from a previous launch, including altitude, velocity, and acceleration profiles.
2. Develop or configure a script to mock the IMU by feeding the flight log data into the WHJ system as real-time sensor inputs.
3. Set a target altitude below the known apogee from the flight log.
4. Run the simulation, allowing the WHJ system to predict apogee and actuate fin deployment based on the mocked IMU data.
5. Record predicted apogee, fin deployment timing, and system response.
6. Compare predicted apogee to the actual apogee from the flight log and verify fin deployment behavior.

Results

This test demonstrates that the WHJ system accurately predicted the apogee from the previous flight log within a 2% margin. When the target altitude was set below the predicted apogee, the control system triggered fin deployment at the appropriate time, consistent with the flight log's ascent profile. Successful execution confirms the WHJ system's ability to process mocked IMU data effectively, validating both the apogee prediction algorithm and the control logic for air brakes deployment.

8.2.15 Air Brakes Effectiveness Flight Test

The Air Brakes Effectiveness Flight Test evaluated how effectively the Air Brakes mechanism reduced apogee and ascent velocity. The physical test involved launching a Full-scale Launch Vehicle equipped with the Air Brakes payload, featuring a gear-driven system deploying two layers of offset fins. Data from onboard sensors, including acceleration and altitude measurements, validated ascent rate reductions and overall performance compared to simulated flights and initial estimates. The rocket was estimated to reach 4200 ft without Air Brakes, with a target apogee of 4000 ft set for this test.

Table 8.33: Air Brakes effectiveness flight test success criteria.

Success Criteria	Status
The Air Brakes mechanism is successfully recovered	Verified
Apogee is within 4% of target apogee (4000 ft)	Verified
Apogee is significantly reduced with Air Brake deployment	Verified
Increase in negative acceleration observed with fin deployment	Verified

Controllable Variables

- Air Brake deployment timing
- Launch Vehicle mass and configuration
- Initial launch angle
- Sensor calibration for acceleration and altitude

Required Facilities, Equipment, Tools, and Software

1. Launch site
2. Air Brakes system and components (gear-driven, two-layer offset fins)
3. Launch Vehicle and all other tools, components, and hardware listed in the Launch Day Checklist in Section 7.2
4. Onboard IMU (acceleration, altitude, orientation)
5. Data logging and analysis software

Methodology

- Prepare the Launch Vehicle and Air Brakes system for launch, ensuring the mechanism is functional.
- Conduct a flight with Air Brake actively controlling the fins to target a 4000 ft. apogee.
- Retrieve and analyze flight data post-launch, comparing actual performance to the estimated 4200 ft. and simulated results.

Results

The Launch Vehicle was launched at a 5 degree angle off the pad with an estimated apogee of 4200 ft without Air Brakes deployment. The actual apogee reached was 3958 ft, which is a reduction of 242 ft. This is within 1% of the target apogee. The Prediction and fin deployment can be overlayed with the actual apogee as seen in figure 8.30.

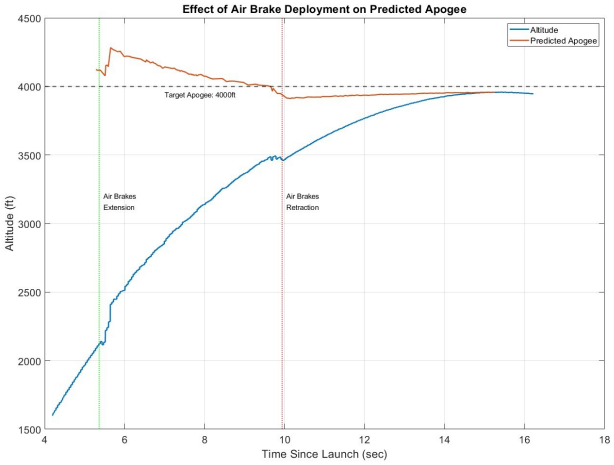

Figure 8.30: Altitude & Prediction v.s. Time.

The altitude data spiked during deployment which means there was a pressure drop when the fins were deployed. This caused the altitude to falsely read higher than it actually was.

Data from the IMU confirmed a significant increase in negative acceleration following fin deployment, consistent with the expected drag effect. This can be seen in figure 8.31 where the acceleration curve abruptly decreases with the deployment of the fins.

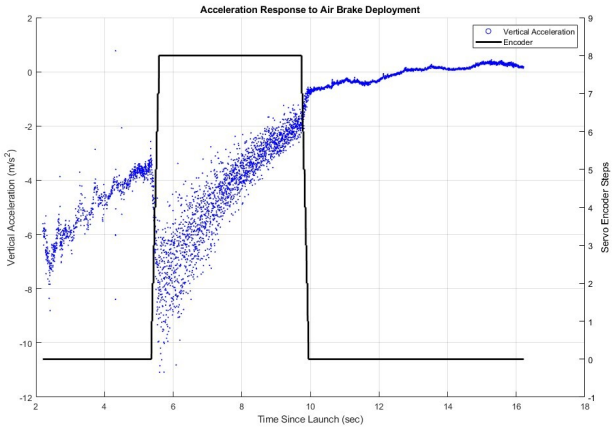

Figure 8.31: Acceleration and Encoder position vs time.

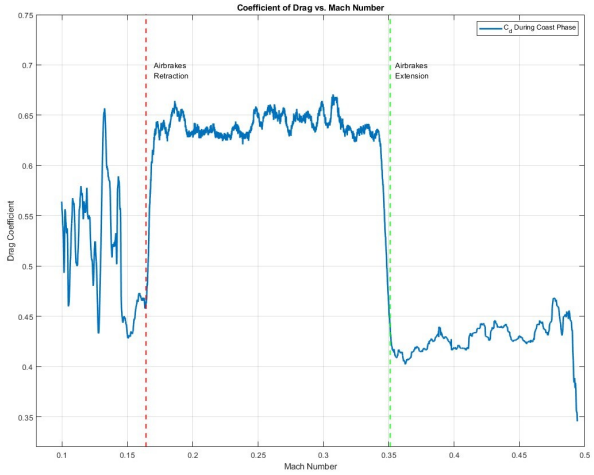

Figure 8.32: Cd vs Mach Number

Similarly, the effects of the fin deployment on drag can be seen by figure 8.32 which show the calculated coefficient of drag vs the Mach number. The cd value should increase when the fins are deployed and this concept is clearly demonstrated by the plot.

Despite the Launch Vehicle experiencing a recovery failure, the Air Brakes mechanism remained intact and operational with the exception of missing data packets upon impact. The flight performance aligns with the simulated expectations from Section 8.2.14.

8.2.16 Air Brakes Battery Life Test.

The battery life test evaluates the performance and endurance of the Launch Vehicle's power systems under standby conditions, simulating the pre-launch phase on the launch pad. Two configurations were tested: (1) a dual-battery setup with two 2200mAh 2S LiPo batteries (one for the Raspberry Pi (RasPi) and one for the servo system), and (2) a single-battery setup with one 2200mAh 4S LiPo powering both systems. The tests measure battery voltage drop, runtime, and system reliability over time.

Table 8.34: Battery Endurance Flight Test Success Criteria.

Success Criteria	Status
The Air Brakes flight computer remains operational for at least 3 hours	Verified
The Battery does not overheat	Verified
The electronics do not power off or overheat	Verified

Controllable Variables

- Battery configuration (dual 2S vs. single 4S)
- Battery capacity and initial charge state
- Main script
- System load (RasPi and servo power draw)

Required Facilities, Equipment, Tools, and Software

1. Test bench
2. Two 2200mAh 2S LiPo batteries and one 2200mAh 4S LiPo battery
3. Raspberry Pi and servo system with associated peripherals
4. Main script for standby mode operation
5. Multimeter for initial voltage verification
6. Computer for data analysis post-test

Methodology

- Configure the Launch Vehicle systems with the dual-battery setup (2x 2200mAh 2S LiPo: one for RasPi, one for servo).
- Connect batteries, initialize the main script in standby mode, and record start time and initial voltages.
- Monitor systems until failure or a set endpoint, logging voltage data continuously.
- (After first test failed) repeat the process with the single-battery setup (1x 2200mAh 4S LiPo powering both RasPi and servo).
- Analyze voltage drop, runtime, and system stability for the configurations.

Results

Two tests were conducted. In the first test (dual-battery, 2x 2200mAh 2S LiPo), starting at 9:35 PM, the RasPi battery began at 8.33V and the servo battery at 8.38V. The test ended at 11:40 PM with the RasPi battery at 6.0V (below the 6.5V threshold) and the servo battery at 8.25V, yielding a runtime of 2 hours and 5 minutes. The RasPi disconnected before the 3-hour target, indicating insufficient endurance. In the second test (single-battery, 1x 2200mAh 4S LiPo), starting at 5:50 PM, the battery began at 16.23V and ended at 9:00 PM at 13.98V, achieving a runtime of 3 hours and 10 minutes with no system failures. The single-battery configuration outperformed the dual-battery setup in runtime and maintained operational voltage while meeting requirements.

8.2.17 Lessons Learned From Testing

The testing suite for the WARHEAD payload and Air Brakes systems revealed several critical lessons that enhanced system reliability and performance. Significant discrepancies emerged in some areas. The Air Brakes Battery Life Test exposed a major issue in the dual 2S LiPo setup, which lasted only 2 hours and 5 minutes against a 3-hour requirement. This required an upgrade to a single 2200mAh 4S LiPo battery that easily achieved 3 hours and 10 minutes with room to spare. A similar situation also led to the replacement of one of the WARHEAD's 2S 2200mAh LiPos to a 4S 2200mAh LiPo. Additionally, the Air Brakes Effectiveness Flight Test reached an apogee of 3958 ft (target: 4000 ft), but pressure spikes during fin deployment caused altitude reading errors, highlighting the need for improved housing sealing to mitigate pressure fluctuations. The WARHEAD Remote Override Range Test achieved 2089 ft line-of-sight but struggled with minor obstacles and landscape interference.

8.3 Requirements Compliance

- Fully Verified: The verification required for this requirement is complete. All of the success criteria has been met.
- Partially Verified: One or more of the success criteria has been met. However, one criteria is still in progress or non-applicable.
- In Progress: The verification process has begun, but is not completed.
- N/A: The team does not expect to utilize this requirement for successful completion for the project. An example is the requirement requiring explicit permission to utilize the secondary motor option.

The tables below illustrate the completion status of requirements for the project, categorized as NASA-defined requirements (Table 8.35) and team-derived requirements (Table 8.36).

Table 8.35: NASA Requirements Completion Status

Fully Verified	Partially Verified	In Progress	Not Verified	N/A
96.35% (132)	0.00% (0)	0.00% (0)	0.00% (0)	3.65% (5)

Table 8.36: Team-Derived Requirements Completion Status

Fully Verified	Partially Verified	In Progress	Not Verified	N/A
98.55% (136)	0.00% (0)	0.00% (0)	0.00% (0)	1.45% (2)

8.3.1 Competition Requirements

Table 8.37: 2024-2025 General Requirements

NASA Req No.	Requirement Statement	Planned Action	Verification Success Criteria	Verification Method	Phase	Subsystem Allocation	Verification Results
1.1	Students on the team SHALL do 100% of the project, including design, construction, written reports, presentations, and flight preparation with the exception of assembling the motors and handling black powder or any variant of ejection charges, or preparing and installing electric matches (to be done by the team's mentor). Student team members SHALL only be a part of one team in any capacity. Teams SHALL submit new work. Excessive use of past work SHALL merit penalties.	The team members of the NC State's High-Powered Rocketry Club will design, build, and document a completely original work as a solution to the challenge and vehicle requirements outlined in the NASA SL Handbook.	**(1)** Documentation of student participation in construction and flight preparation. **(2)** Compliance with NASA SL Handbook requirements verified through inspection.	**(1) Review:** Include team member roster in report documentation, along with safety pledge. **(2) Review:** Include a requirement verification matrix or table in all report documentation.	Verified	Project Management	**(1)** Academic Pledge & Student Sign Off **(2)** See Section 8.3 for the requirement compliance matrices
1.2	The team SHALL provide and maintain a project plan to include, but not limited to, the following items: project milestones, budget and community support, checklists, personnel assignments, STEM engagement events, and risks and mitigations.	The Team Lead, Outreach Officer, Safety Officer, Treasurer, and Webmaster will develop a project plan and adhere to it. This plan will include deadlines and expectations for project milestones, budget and community support, checklists, personnel assignments, STEM engagement events, and risks and mitigations.	**(1)** Inclusion of a successful project plan in all report documents. **(2)** Inclusion of a budget report in all report documents.	**(1) Review:** Include multiple project plans for all subsystems in all report documentation. **(2) Review:** Include detailed budget reports in all report documentation.	Verified	Project Management	**(1)** See Section 8.5.2 for the team's updated project plan and subsystem construction timelines. **(2)** See Section 8.4 for the team's updated budget plan and resource allocation.
1.3	Team members who will travel to the Huntsville Launch SHALL have fully completed registration in the NASA Gateway system before the roster deadline.	The Team Lead will ensure all team members who shall travel to the Huntsville Launch have completed in the NASA Gateway system before the roster deadline or by November 29, 2024.	Team members complete registration for NASA Gateway system prior to Nov. 29th, 2024	**Inspection:** Inspect the NASA Gateway profile for completed registrations prior to roster identification.	Verified	Project Management	Team Lead submitted the team roster for attendance to the Huntsville Launch. All submitted members completed the NASA Gateway registration.
1.3.1	Team members SHALL include students actively engaged in the project throughout the entire year.	The Team Lead will only select team members who have actively engaged in the project throughout the year to travel to the Huntsville Launch.	**(1)** The Huntsville roster will be compared with the meeting "sign-in" sheets. **(2)** Roster only includes individuals actively engaged enough to have a fully completed NASA Gateway profile.	**(1) Inspection:** Inspect meeting "sign-in" sheets and confirm team member participation before Huntsville selection. **(2) Inspection:** Inspect team roster and confirm team member Gateway registration prior to final submittal to NASA.	Verified	Project Management	**(1)** Subsystem leads only selected the most active club members for the Huntsville launch roster. **(2)** Every member chosen for the Huntsville roster are registered in Gateway.
1.3.2	Team members SHALL include one mentor.	The Team Lead will invite the mentor(s) identified in Section 1.1.3 to the Huntsville Launch competition. A notice of the Huntsville Launch dates will be sent to the mentor(s) once NCSU HPRC is officially accepted into the competition.	**(1)** Mentor identified in report documentation is invited to Huntsville **(2)** Mentor attends Huntsville Launch	**(1) Inspection:** Verify that a Huntsville invitation is sent to the mentor identified in report documentation. **(2) Demonstration:** Verify mentor's attendance at the Huntsville Launch.	Verified	Project Management	**(1)** See Section 1.1.3 for identified team mentor and Huntsville roster for their invitation. **(2)** Mentor confirmed eligibility and intent to travel to Huntsville on the specified launch dates.

Table 8.37: 2024-2025 General Requirements

NASA Req. No.	Requirement Statement	Planned Action	Verification Success Criteria	Verification Method	Phase	Subsystem Allocation	Verification Results
1.3.3	Team members SHALL include no more than two adult educators.	The Team Lead will invite the adult educator identified in Section 1.1.3 to the Huntsville Launch competition. A notice of the Huntsville Launch dates will be sent to the adult educator once NCSU HPRC is officially accepted into the competition.	**(1)** Adult educators identified in report documentation is invited to Huntsville. **(2)** Notice of competition dates and location sent to adult educators.	**(1) & (2) Review:** Confirm that the appropriate amount of adult educators are listed in report documentation and Huntsville travel roster.	Verified	Project Management	**(1)** See Section 1.1.3 for identified adult educator and Huntsville roster for their invitation.
1.4	Teams SHALL engage a minimum of 250 participants in Educational Direct Engagement STEM activities. These activities can be conducted in-person or virtually. To satisfy this requirement, all events shall occur between project acceptance and the FRR addendum due date. A template of the STEM Engagement Activity Report can be found on pages 40 – 43.	The Outreach Lead, identified in Section 1.6, will organize multiple events across the fall and spring semesters at local schools, organizations, etc. The Outreach Lead will keep a tally of all participants and a record of proof, consisting of photos and email confirmations. All information will be shared with the Team Lead before and after the event.	**(1)** Team ”Outreach Officer” identified in the proposal report document. **(2)** Outreach Officer reports participant and event details to Team Lead and corresponding NASA officials.	**(1) Review:** Confirm Outreach Officer is identified in proposal report documentation. **(2) Demonstration:** Outreach Officer takes photos / records all contact information and event details for all outreach events. Information is shown to Team Lead and sent to NASA officials.	Verified	Project Management	**(1)** See Section 1.6 of Proposal documentation for identified Outreach Officer. **(2)** See STEM Engagement Reports sent to NASA.
1.5	The team SHALL establish and maintain a social media presence to inform the public about team activities.	The Social Media Officer, identified in Section 1.6, will document club progress and events across multiple social media platforms. Platforms consist of Instagram, Facebook, X, TikTok, and LinkedIn.	**(1)** Team ”Social Media Officer” identified in the proposal report document **(2)** Social Media Officer posts major team progress updates across all social media platforms. **(3)** Social media platforms identified in report documentation.	**(1) Review:** Confirm Social Media Officer is identified in proposal report documentation. **(2) Demonstration:** Social Media Officer posts about all major design and construction milestones. **(3) Review:** Confirm team social media platforms are identified in proposal report documentation.	Verified	Project Management	**(1)** See Section 1.6 of Proposal documentation for identified Social Media Officer. **(2)** All major team progress updates are posted to multiple social media platforms. **(3)** See Appendix 9.3.1 for identified NCSU HPRC social media accounts.
1.6	Teams SHALL email all deliverables to the NASA project management team by the deadline specified in the handbook for each milestone. In the event that a deliverable is too large to attach to an email, inclusion of a link to download the file will be sufficient. Late submissions of PDR, CDR, or FRR milestone documents will NOT be accepted. Teams that fail to submit the PDR, CDR, or FRR milestone documents will be eliminated from the project.	The Team Lead will email/ submit all deliverables to the NASA project management team by the deadline specified in the NASA SL handbook. The Webmaster, identified in Section 1.6, will receive the deliverables and upload it to the NCSU HPRC website by the specified deadline.	**(1)** Team Lead emails/ submits milestone deliverables by the appropriate deadline. **(2)** Team ”Webmaster”, identified in proposal report documentation, uploads milestone deliverables to the team website.	**(1) Demonstration:** Milestone deliverables are submitted on time and team continues in competition progress. **(2) Review:** Confirm Webmaster is identified in proposal report documentation.	Verified	Project Management	**(1)** PDR & CDR milestone deliverables uploaded to team website and submitted by Team Lead by the specified deadline. **(1)** See Appendix 9.3.1 for the NCSU HPRC website information. **(2)** See Section 1.6 of Proposal documentation for identified Webmaster.
1.7	Teams who do not satisfactorily complete each milestone review (PDR, CDR, FRR) will be provided action items to be completed following their review and will be required to address action items in a delta review session. After the delta session, the NASA management panel will meet to determine the teams’ status in the program, and the teams will be notified shortly thereafter.	Team members will complete all milestone review documents and submit before the provided deadline. In the event that NASA determines a document is not satisfactorily completed, the team will address the action items in a delta review session.	**(1)** Team completes all milestone review documents and submits prior to the deadline if required. **(2)** Action items are addressed in milestone presentations if required.	N/A	N/A	Project Management	N/A

Table 8.37: 2024-2025 General Requirements

NASA Req. No.	Requirement Statement	Planned Action	Verification Success Criteria	Verification Method	Phase	Subsystem Allocation	Verification Results
1.8	All deliverables SHALL be in PDF format.	The Team Lead will send all deliverables to the NASA project management team in PDF format.	Team Lead submits NASA milestone deliverables in PDF format.	**Review:** Verify project deliverable submissions are in PDF format.	Verified	Project Management	Submitted FRR, CDR, PDR and proposal documentation in PDF format.
1.9	In every report, teams will provide a table of contents, including major sections and their respective subsections.	The Team Lead will organize the report documents to include and follow a table of contents.	Milestone report includes a table of contents.	**Review:** Verify milestone report submissions have a table of contents.	Verified	Project Management	See this report documentation and previous milestone submissions.
1.10	In every report, the team SHALL include the page number at the bottom of the page.	The Team Lead will ensure that a page number is included at the bottom of every page in the report document.	Milestone reports & presentations include page numbers at the bottom of every page.	**Review:** Verify milestone report and presentation submissions have page numbers at the bottom of every page.	Verified	Project Management	See this report documentation and previous milestone submissions.
1.11	The team SHALL provide any computer equipment necessary to perform a video teleconference with the review panel. This includes, but is not limited to: a computer system, video camera, speaker telephone, and a sufficient Internet connection. Cellular phones should be used for speakerphone capability only as a last resort.	The Team Lead will provide and set-up all computer equipment necessary for video teleconference presentations/meetings in advance. The Team Lead will only use cellular phones for meetings and presentations as a last resort after all other avenues have been attempted.	**(1)** Team Lead selects a meeting room and provides all computer equipment necessary. **(2)** All video teleconference equipment is tested prior to the official presentation time. **(3)** Cellular phones are used as a last resort.	**(1) Demonstration:** Design review occurs in a private meeting room. **(2) Demonstration:** Audio and recording equipment function as designed during design review. **(3)** N/A	Verified	Project Management	**(1) & (2) PDR / CDR:** Demonstrated successful video teleconferencing capabilities. Received an ”expected professionalism” score. **CDR & FRR Presentation:** Performed in the same way as CDR and PDR
1.12	All teams attending Launch Week SHALL be required to use the launch pads provided by Student Launch’s launch services provider. No custom pads will be permitted at the NASA Launch Complex. At launch, 8-foot 1010 rails and 12-foot 1515 rails will be provided. The launch rails will be canted 5 – 10 degrees away from the crowd on Launch Day. The exact cant will depend on Launch Day wind conditions.	The Aerodynamics Lead and Structures Lead will ensure and construct a Launch Vehicle that can use the launch pads provided by the NASA SLs launch services provider. The Aerodynamics Lead and Structures Lead will consider the launch rail cant and dimensions when designing/constructing the Launch Vehicle.	**(1)** Launch Vehicle is designed to launch on pads provided by the NASA SLs launch services provider. **(2)** VDF is performed successfully.	**(1) Demonstration:** Successful Subscale, VDF, and PDF launches on approved and related launch pads. **(2) Review:** Successful Subscale launch and launch pad information included in CDR documentation.	Verified	Aerodynamics & Structures	**(1)** See Section 3.3 for current Launch Vehicle design and propulsion system. **(2)** See Section 6.2 for proof of a successful VDF flight. Launch pad specifications can be found in Section 6.1.1.
1.13	Each team SHALL identify a “mentor.” A mentor is defined as an adult who is included as a team member, who will be supporting the team (or multiple teams) throughout the project year, and may or may not be affiliated with the school, institution, or organization. The team mentor shall not be a student team member. The mentor shall maintain a current certification, and be in good standing, through the National Association of Rocketry (NAR) or Tripoli Rocketry Association (TRA) for the motor impulse of the Launch Vehicle and must have flown and successfully recovered (using electronic, staged recovery) a minimum of two flights in this or a higher impulse class, prior to PDR.	The Team Lead will identify a mentor according to NASA Regulation 1.13 and include the mentors information in all NASA documentation. The Treasurer and Team Lead will provide a travel stipend to the mentor(s) to travel to the Huntsville Launch.	**(1)** All milestone reports identify the team’s mentor and their contact information (NASA Req. 1.13). **(2)** Travel stipend will be requested for the team’s mentor for travel to the Huntsville Launch.	**(1) Review:** Confirm mentor name and contact information is listed in all report documentation. **(2) Demonstration:** Mentor attends Huntsville launch with travel stipend.	Verified	Project Management	**(1)** See Section 1.1.3 for identified mentor. **(2)** Mentor agreed to attend Huntsville launch. Team Lead will request stipend.

Table 8.37: 2024-2025 General Requirements

NASA Req. No.	Requirement Statement	Planned Action	Verification Success Criteria	Verification Method	Phase	Subsystem Allocation	Verification Results
1.14	Teams SHALL track and report hours spent on milestones.	The Team Lead and Integration Lead will record the hours worked by all sub-teams at the end of every week. The Team Lead will ensure the number of hours spent working on each milestone is compiled for each milestone and is included in the respective document.	**(1)** Integration Lead updates a team member hour chart weekly. **(2)** Hours spent per milestone is included in all report documentation.	**(1) Demonstration:** Excel sheet with team member weekly hours is included in appendix. **(2) Review:** Verify that hours spent per milestone is included in report documentation.	Verified	Integration & Project Management	**(1)** See Appendix 9.3.1 for weekly hour excel sheet. **(2)** See Section 1.1.4 for hours spent on this specific milestone

Table 8.38: NASA 2024-2025 Vehicle Requirements

NASA Req No.	Requirement Statement	Planned Action	Verification Success Criteria	Verification Method	Phase	Subsystem Allocation	Verification Results
2.1	The vehicle SHALL deliver the payload to an apogee altitude between 4,000 and 6,000 feet above ground level (AGL). Teams flying below 3,500 feet or above 6,500 feet on their competition launch SHALL receive zero altitude points towards their overall project score and SHALL not be eligible for the Altitude Award.	The Aerodynamics Lead will design a launch vehicle that reaches an apogee between 4,000 and 6,000 feet AGL. The Structures Lead will organize and facilitate the construction of the launch vehicle with the rest of the team.	**(1)** Apogee ranges between 4,000-6,000 feet AGL during VDF and PDF flights. **(2)** Simulations predict apogee within the 4,000-6,000 feet range.	**(1) Test:** Apogee flight data during VDF and PDF flights confirm the altitude is within the 4,000-6,000 feet range. **(2) Analysis:** Use OpenRocket and RockSim simulations to predict the expected altitude range.	Verified	Aerodynamics, Structures	**(1) & (2)** The LV reaches an apogee of 4606 ft using RocketPy. The target altitude is 4600 ft with the Air Brake module. See Section 3.7.3 for flight simulations and Section 6 for the VDF/PDF results.
2.2	Teams SHALL declare their target altitude goal at the CDR milestone. The declared target altitude SHALL be used to determine the team's altitude score.	The Aerodynamics Lead will perform multiple simulations to determine the approximate apogee for the full-scale rocket and include the target altitude in the CDR milestone.	**(1)** Simulations provide a predicted apogee altitude. **(2)** Target altitude is explicitly stated in the CDR milestone documentation.	**(1) Analysis:** Use simulations (OpenRocket and RockSim) to predict the apogee. **(2) Inspection:** Inspect CDR report to confirm inclusion of the target altitude.	Verified	Aerodynamics	**(1) & (2)** The target altitude was declared in CDR documentation and is 4600 ft. See Section 3.7.3 for the apogee simulations.
2.3	The launch vehicle SHALL be designed to be recoverable and reusable. Reusable is defined as being able to launch again on the same day without repairs or modifications.	The Structures Lead and Recovery Lead will design a recovery system that allows the launch vehicle to be recovered and re-used upon ground impact. The rocket will sustain no non-cosmetic damage and have the ability to launch twice in the same day without repairs or needed modifications.	**(1)** Launch vehicle can be flown twice in one day without requiring major repairs. **(2)** Launch vehicle is inspected after recovery.	**(1) Inspection:** Physically inspect all sections post-flight to ensure no damage. **(2) Inspection:** Include recovery photos in appropriate report documentation.	Verified	Recovery, Structures	**(1) & (2)** Subscale launch vehicle flown twice in one day. This is reported in CDR documentation. Additionally, Full-scale was successfully flown with minimal recovery damage. See recovery photos for the Full-scale launch in Section 6.2.3.
2.4	The launch vehicle SHALL have a maximum of four (4) independent sections. An independent section is defined as a section that is either tethered to the main vehicle or is recovered separately from the main vehicle using its own parachute.	The Aerodynamics Lead and Recovery Lead will design a launch vehicle and recovery system that has a maximum of four independent sections.	The launch vehicle has three independent sections that are tethered together.	**Inspection:** Inspect the launch vehicle design to verify the number of independent sections and confirm that they are tethered together.	Verified	Aerodynamics, Recovery	The LV has 4 independent sections that remain tethered together. See Figure 3.5 for final launch vehicle configuration.
2.4.1	Coupler/airframe shoulders which are located at in-flight separation points SHALL be at least two airframe diameters in length. (One body diameter of surface contact with each airframe section).	The Aerodynamics Lead will design the coupler/airframe shoulders to be at least 2 airframe diameters in length. The Structures lead shall build the coupler/airframe shoulders per the Aerodynamics Leads design.	The coupler/airframe shoulders at in-flight separation points are 12 in. long.	**Measurement:** Measure the coupler/airframe shoulder design to ensure they meet the 12-inch length requirement.	Verified	Aerodynamics & Structures	Each internal coupler length is 6 in (adding to 12 in) for in-flight separation points. See Figures 3.5 and 3.8 for manufactured coupler lengths.

Table 8.38: NASA 2024-2025 Vehicle Requirements

NASA Req. No.	Requirement Statement	Planned Action	Verification Success Criteria	Verification Method	Phase	Subsystem Allocation	Verification Results
2.4.2	Coupler/airframe shoulders which are located at non-in-flight separation points SHALL be at least 1.5 airframe diameters in length. (0.75 body diameter of surface contact with each airframe section.)	The Aerodynamics Lead will design the coupler/airframe shoulders to be at least 1.5 airframe diameters in length. The Structures lead shall build the coupler/airframe shoulders per the Aerodynamics Leads design.	The coupler/airframe shoulders at in-flight separation points are at least 9 in. long.	**Measurement:** Measure coupler/airframe shoulder design to verify the 9-inch length requirement.	Verified	Aerodynamics & Structures	The coupler lengths are 1.5 airframe diameters in length at non-in-flight separation points. See Figure 3.5 for the final launch vehicle configuration.
2.4.3	Nose cone shoulders which are located at in-flight separation points SHALL be at least ½ body diameter in length.	The Aerodynamics Lead will design the Nose Cone shoulders to be at least 0.5 body diameter in length. The Structures Lead will construct the Nose Cone shoulders per the Aerodynamics Leads design.	Nose Cone shoulders located at in-flight separation points are 3 in long.	**Measurement:** Measure Nose Cone shoulder design to ensure they meet the length requirement.	Verified	Aerodynamics & Structures	The Nose Cone shoulder length is 3 in. See Figures 3.8and 3.9 for final manufactured Nose Cone configuration.
2.5	The launch vehicle SHALL be capable of being prepared for flight at the launch site within 2 hours of the time the Federal Aviation Administration flight waiver opens.	The Team Lead, Integration Lead, and Safety Officer will develop launch day checklists that can be performed within 2 hours of the time the FAA flight waiver opens.	The launch day checklist ensures full preparation within 2 hours.	**Review:** Verify the launch day checklist allows for all tasks to be completed within the 2-hour preparation window.	Verified	Integration, Project Management, Safety	The VDF attempt was prepared in under 2 hours. See Section 7.2 for the Full-scale Launch Day Checklist.
2.6	The launch vehicle and payload SHALL be capable of remaining in launch-ready configuration on the pad for a minimum of 3 hours without losing the functionality of any critical on-board components, although the capability to withstand longer delays is highly encouraged.	The Team Lead, Integration Lead, and Safety Officer will monitor and ensure that the launch vehicle is able to remain in launch-ready configuration on the launch pad for a minimum of 3 hours without losing any critical components. The Team Lead and Safety Officer will ensure the safety of the launch vehicle during this time.	Vehicle design can remain in launch-ready configuration for at least 3 hours without failure or vital battery outages.	**Analysis:** Analyze the launch vehicle design and operational procedures to ensure it supports 3 hours in launch-ready configuration without failure. Review all batteries to confirm they remain operational in launch-ready state for 3 hours.	Verified	Project Management, Safety	The avionics, payload, and experimental payload are able to remain on the pad for a minimum of 3 hours. Battery longevity test results can be found in Section 8.2.5.
2.7	The launch vehicle SHALL be capable of being launched by a standard 12-volt direct current firing system. The firing system SHALL be provided by the NASA-designated launch services provider.	The Team Lead and Structures Lead will select a motor igniter that is capable of being launched by a 12-volt direct current firing system.	The vehicle is capable of being launched with a 12-volt firing system.	**Test:** Test the firing system with the selected motor igniter to ensure compatibility with a 12-volt direct current system during subscale, VDF, and PDF.	Verified	Project Management, Structures	The LV is compatible with a standard 12-volt direct current firing system. See Section 1.2.2 for final launch vehicle motor selection.
2.8	The launch vehicle SHALL require no external circuitry or special ground support equipment to initiate launch (other than what is provided by the launch services provider).	The Team Lead and Structures Lead will select a motor igniter that is capable of being launched by a 12-volt direct current firing system.	**(1)** The vehicle only requires a standard 12-volt firing system to initiate launch. **(2)** No additional external circuitry or special equipment is required.	**(1) Review:** Verify that the vehicle only requires the standard 12-volt firing system to initiate launch. **(2) Demonstration:** Demonstrate with subscale, VDF, and PDF that no external circuitry or special equipment is required for launch initiation.	Verified	Project Management, Structures	The LV does not require external circuitry to initiate launch. See Section 1.2.2 for final launch vehicle motor selection and launch details.
2.9	Each team SHALL use commercially available ematches or igniters. Hand-dipped igniters SHALL not be permitted.	The Team Lead and Safety Officer will ensure that all emaches and igniters used are commercially available and that the launch vehicle does not use hand-dipped igniters.	Ematches or igniters used are commercially available.	**Inspection:** Inspect ematches and/or igniter types to confirm compliance with commercial standards.	Verified	Project Management, Recovery, Safety	The electric matches (ematches) are purchased from Firewire. See Table 8.46 for the recovery equipment vendors.

Table 8.38: NASA 2024-2025 Vehicle Requirements

NASA Req. No.	Requirement Statement	Planned Action	Verification Success Criteria	Verification Method	Phase	Subsystem Allocation	Verification Results
2.10	The launch vehicle SHALL use a commercially available solid motor propulsion system using ammonium perchlorate composite propellant (APCP) which is approved and certified by the National Association of Rocketry (NAR), Tripoli Rocketry Association (TRA), and/or the Canadian Association of Rocketry (CAR).	The Aerodynamics Lead will select a commercially available solid motor propulsion system that uses APCP and is approved by NAR, TRA, and/or CAR for the launch vehicle. The Team Lead will verify the motor selection.	**(1)** The motor is certified by NAR, TRA, or CAR. **(2)** The motor is commercially available.	**(1) Review:** Verify the motor's certification status with NAR, TRA, or CAR. **(2) Review:** Confirm the motor's commercial availability through the manufacturer's website or documentation.	Verified	Aerodynamics, Project Management	**(1) & (2)** The selected Full-scale motor is a L1520T. See Section 1.2.2 for final launch vehicle motor selection.
2.10.1	Final motor choice SHALL be declared by the Preliminary Design Review (PDR) milestone.	The Aerodynamics Lead will declare the final motor choice in the PDR milestone.	Final motor choice is declared by the PDR milestone.	**Review:** Verify that the final motor choice is included in the PDR documentation and future documentation.	Verified	Aerodynamics	See Section 1.2.2 for final launch vehicle motor selection. See PDR document for inclusion of final launch vehicle motor selection.
2.10.2	Any motor change after PDR SHALL be approved by the NASA management team or NASA Range Safety Officer (RSO). Changes for the sole purpose of altitude adjustment SHALL not be approved. A scoring adjustment against the team's overall score SHALL be incurred when a motor change is made after the PDR milestone. The only exception is teams switching to their secondary motor choice provided the primary motor choice is unavailable due to a motor shortage.	The Team Lead will request the NASA management team or NASA RSO for approval for motor changes following the PDR milestone.	Motor changes after PDR will not be made.	N/A: This requirement is not pursued, as no motor changes are planned after PDR.	N/A	Project Management	N/A
2.11	The launch vehicle SHALL be limited to a single motor propulsion system.	The Aerodynamics Lead will design the launch vehicle to be a single motor propulsion vehicle.	The vehicle uses a single motor propulsion system.	Inspection: Inspect the propulsion system design to confirm that only one motor is used.	Verified	Aerodynamics	The propulsion system requires a single L1520T motor. See Section 1.2.2 for final launch vehicle propulsion system design.
2.12	The total impulse provided by a College or University launch vehicle SHALL not exceed 5,120 Newton seconds (L-class).	The Aerodynamics Lead will select a motor for the launch vehicle that will not exceed a total impulse of 5,120 Newton seconds.	The motor selected does not exceed a total impulse of 5,120 Newton seconds.	Analysis: Analyze motor specifications and confirm that the motor's total impulse is within the 5,120 N·s limit.	Verified	Aerodynamics	The total impulse of the L1520T motor is 3715.9 Ns. See Section 1.2.2 for final launch vehicle motor selection.
2.13	Pressure vessels on the vehicle SHALL be approved by the RSO.	The Structures Lead will not include a pressure vessel in the launch vehicle design.	No pressure vessel is included in the launch vehicle design.	Inspection: Confirm the design does not include any pressure vessels.	Verified	Structures	No pressure vessels on the LV. See Section 3.3 for final launch vehicle design.
2.13.1	The minimum factor of safety (Burst or Ultimate pressure versus Max Expected Operating Pressure) SHALL be 4:1 with supporting design documentation included in all milestone reviews.	The Structures Lead will not include a pressure vessel in the launch vehicle design.	No pressure vessel is included in the launch vehicle design.	**Inspection:** Confirm the design does not include any pressure vessels.	Verified	Structures	No pressure vessels on the LV. See Section 3.3 for final launch vehicle design.
2.13.2	Each pressure vessel SHALL include a pressure relief valve that sees the full pressure of the tank and is capable of withstanding the maximum pressure and flow rate of the tank.	The Structures Lead will not include a pressure vessel in the launch vehicle design.	No pressure vessel is included in the launch vehicle design.	**Inspection:** Confirm the design does not include any pressure vessels.	Verified	Structures	No pressure vessels on the LV. See Section 3.3 for final launch vehicle design.

Table 8.38: NASA 2024-2025 Vehicle Requirements

NASA Req. No.	Requirement Statement	Planned Action	Verification Success Criteria	Verification Method	Phase	Subsystem Allocation	Verification Results
2.13.3	The full pedigree of the tank SHALL be described, including the application for which the tank was designed and the history of the tank. This SHALL include the number of pressure cycles put on the tank, the dates of pressurization/depressurization, and the name of the person or entity administering each pressure event.	The Structures Lead will not include a pressure vessel in the launch vehicle design.	No pressure vessel is included in the launch vehicle design.	**Inspection:** Confirm the design does not include any pressure vessels.	Verified	Structures	No pressure vessels on the LV. See Section 3.3 for final launch vehicle design.
2.14	The launch vehicle SHALL have a minimum static stability margin of 2.0 at the point of rail exit. Rail exit is defined at the point where the forward rail button loses contact with the rail.	The Aerodynamics Lead will design the launch vehicle to have a minimum static stability margin of 2.0 at the point of rail exit.	The launch vehicle stability margin ranges between 2.0 and 2.9.	**Analysis:** Analyze the stability margin calculations and verify with simulations (OpenRocket and RockSim) to ensure it falls within the 2.0 to 2.9 range.	Verified	Aerodynamics	The manufactured Full-scale LV static stability is 2.0. See Section 3.7.4 for launch vehicle stability margin calculations.
2.15	The launch vehicle SHALL have a minimum thrust to weight ratio of 5.0:1.0.	The Aerodynamics Lead will design the launch vehicle to have a minimum thrust to weight ratio of 5.0:1.0.	The launch vehicle thrust to weight ratio is greater than 5.0:1.0.	**Analysis:** Perform thrust-to-weight ratio calculation using motor specifications and rocket design.	Verified	Aerodynamics	The thrust to weight ratio for the manufactured Full-scale LV is 8.75. See Section 3.7.3 for thrust-to-weight calculations.
2.16	Any structural protuberance on the rocket SHALL be located aft of the burnout center of gravity. Camera housings SHALL be exempted, provided the team can show that the housing(s) causes minimal aerodynamic effect on the rocket's stability.	The Aerodynamics Lead will design the launch vehicle to only have structural protuberance aft of the burnout center of gravity on the rocket.	Structural protuberances are located at least 1 inch aft of the burnout center of gravity.	**Inspection:** Inspect the design to confirm the location of structural protuberances relative to the burnout center of gravity.	Verified	Aerodynamics	The camera housing is located on the Nose Cone of the Full-scale LV. The Air Brake fins slots are located 2 in. aft of the burnout CG. See Section 3.7.4 for burnout center of gravity location.
2.17	The launch vehicle SHALL accelerate to a minimum velocity of 52 fps at rail exit.	The Aerodynamics Lead will design the launch vehicle and select the appropriate motor to have a minimum velocity of 52 fps at rail exit.	**(1)** Rail exit velocity is ≥ 52 fps during flight testing. **(2)** Simulations predict ≥ 52 fps rail exit velocity.	**(1) Test:** Measure velocity using onboard sensors during subscale, VDF, and PDF launches. **(2) Analysis:** Validate design and motor selection with OpenRocket and RocketPy.	Verified	Aerodynamics	**(1) & (2)** The rail exit velocity during the Full-scale VDF was 90.98 fps. The simulations demonstrate a rail exit velocity of 70.6 fps. See Sections 6.2.2 and 3.7.3 for confirmation.
2.18	All teams SHALL successfully launch and recover a subscale model of their rocket. Success of the subscale is at the sole discretion of the NASA review panel. The subscale flight may be conducted at any time between proposal award and the CDR submission deadline. Subscale flight data SHALL be reported in the CDR report and presentation at the CDR milestone. Subscales are required to use a minimum motor impulse class of E (Mid Power motor).	The team will successfully launch and recover a subscale model of their intended launch vehicle. The Team Lead will ensure that the subscale flight data is reported and presented in the CDR milestone. The Aerodynamics Lead will ensure that the subscale uses a minimum motor impulse class of E.	**(1)** The subscale model is successfully launched and recovered. **(2)** Subscale flight data is documented in the CDR. **(3)** Subscale motor has a minimum motor impulse class of E. **(4)** Subscale flight is determined to be successful by the NASA review panel.	**(1) Test:** Verify the subscale launch and recovery through recorded data or other acceptable evidence. **(2) Review:** Confirm that the flight data is documented in the CDR. **(3) Review:** Verify the motor's impulse class of E through CDR documentation. **(4) Review:** Confirm that the flight is determined to be successful by the NASA review panel.	Verified	Aerodynamics, Project Management	**(1)** See Section 3.3.3 in the CDR documentation for subscale recovery photos. **(2)** See Figures 3.32 and 3.33 in the CDR documentation for the primary and secondary altimeter subscale flight data. **(3)** The Subscale motor was a J500G. **(4)** See Section 3.3 in CDR documentation for the Subscale flight results. No action items were communicated by NASA for the Subscale flight.

Table 8.38: NASA 2024-2025 Vehicle Requirements

NASA Req. No.	Requirement Statement	Planned Action	Verification Success Criteria	Verification Method	Phase	Subsystem Allocation	Verification Results
2.18.1	The subscale model SHALL resemble and perform as similarly as possible to the full-scale model; however, the full-scale SHALL not be used as the subscale model.	The Aerodynamics Lead and Structures Lead will design and construct a subscale launch vehicle that will resemble and perform as similarly as possible to the full-scale launch vehicle. The full-scale model will not be used as the subscale model.	**(1)** The subscale model is similar in design to the full-scale model. **(2)** The subscale model performs similarly to the full-scale model, excluding full-scale use.	**(1) Review:** Review design documents and performance data to confirm the similarity between the subscale and full-scale models. **(2) Test:** Confirm similarity through testing of the subscale model.	Verified	Aerodynamics, Structures	**(1)** See Section 3.3.1 in the CDR documentation for the Subscale scaling factor information. **(2)** See Section 3.3 in the CDR documentation for the results of the subscale flight. The Subscale had the same recovery system (dual-deploy).
2.18.2	The subscale model SHALL carry an altimeter capable of recording the model's apogee altitude.	The Recovery Lead will install an altimeter capable of recording the subscale model's apogee altitude into the launch vehicle.	**(1)** The altimeter is installed correctly and operational. **(2)** Altitude data is recorded by the altimeter.	**(1) Inspection:** Physically inspect the altimeter installation to confirm it is properly installed and operational. **(2) Test:** Verify that apogee altitude data is recorded during flight.	Verified	Recovery	**(1)** The Subscale used a Stratologger CF as the primary altimeter and an EasyMini as the secondary altimeter. See Figures 3.32 and 3.33 in the CDR documentation for the Subscale altimeter data. **(2)** The apogee for the Subscale launch was 1503 ft. See Section 3.3 in the CDR documentation for the flight results of the Subscale launch.
2.18.3	The subscale rocket SHALL be a newly constructed rocket, designed and built specifically for this year's project.	The Aerodynamics Lead and Structures Lead will facilitate the design and construction of a unique subscale rocket, built for the purpose of this years NASA SL challenge.	A new subscale rocket is constructed specifically for this project year.	**Review:** Verify design and construction records to ensure the subscale rocket is newly built for this project year.	Verified	Aerodynamics, Structures	See Section 3.3.1 in the CDR documentation for the unique Subscale rocket design.
2.18.4	Proof of a successful flight SHALL be supplied in the CDR report.	The team will include proof of a successful flight in the CDR report. The Team Lead will verify this information and formatting.	Proof of successful flight provided and properly formatted in CDR.	**Review:** Confirm the inclusion of proof in CDR.	Verified	Project Management	A successful Subscale flight was included in the CDR report. See Section 3.3 in the CDR report for proof of a successful subscale launch.
2.18.4.1	Altimeter flight profile graph(s) OR a quality video showing successful launch, recovery events, and landing as deemed by the NASA management panel are acceptable methods of proof. Altimeter flight profile graph(s) that are not complete (liftoff through landing) SHALL not be accepted.	The Recovery Lead will process altimeter flight data and include altimeter flight profile graphs in the CDR report. If altimeter flight profile graphs are not available, the Recovery Lead will submit a quality photo showing successful launch, recovery events, and landing events as proof for a successful flight.	**(1)** Subscale altimeter data is included and complete in CDR OR **(2)** Quality photos showing successful launch, recovery events, and landing are included in CDR	**Inspection:** Inspect the altimeter flight profile graphs to ensure they are complete and included in the CDR.	Verified	Recovery	The Subscale used a Stratologger CF as the primary altimeter and an EasyMini as the secondary altimeter. See Figures 3.32 and 3.33 in the CDR documentation for the Subscale altimeter data.
2.18.4.2	Quality pictures of the as landed configuration of all sections of the launch vehicle SHALL be included in the CDR report. This includes, but is not limited to: Nose Cone, recovery system, airframe, and booster.	The Recovery Lead will take quality photos of all sections of the launch vehicle in its landed configuration. The Team Lead will include the photos in the CDR report.	Clear, quality photos of all sections of the launch vehicle in the landed configuration are included in the CDR.	**Inspection:** Review photo quality and ensure that all sections of the launch vehicle are covered in the photos included in the CDR.	Verified	Project Management, Recovery	Subscale recovery photos can be seen in Figures 3.35 and 3.36 of the CDR report documentation.

Table 8.38: NASA 2024-2025 Vehicle Requirements

NASA Req. No.	Requirement Statement	Planned Action	Verification Success Criteria	Verification Method	Phase	Subsystem Allocation	Verification Results
2.18.5	The subscale rocket SHALL not exceed 75% of the dimensions (length and diameter) of your designed full-scale rocket. For example, if your full-scale rocket is a 4" diameter, 100" length rocket, your subscale SHALL not exceed 3" diameter and 75" in length.	The Aerodynamics Lead and Structures Lead will design and construct a subscale rocket that does not exceed 75% of the dimensions for the designed full-scale rocket.	Subscale rocket dimensions are ≤75% of the full-scale rocket's dimensions.	**Measurement:** Measure the actual dimensions of the subscale rocket and compare them to the full-scale rocket's dimensions to ensure they are ≤75%.	Verified	Structures	The individual scaling factors for the Subscale LV can be found in Section 3.3.1 of the CDR report documentation.
2.19.1	Vehicle Demonstration Flight— All teams SHALL successfully launch and recover their full-scale rocket prior to FRR in its final flight configuration. The rocket flown SHALL be the same rocket to be flown for their competition launch. The purpose of the Vehicle Demonstration Flight is to validate the launch vehicle's stability, structural integrity, recovery systems, and the team's ability to prepare the launch vehicle for flight. A successful flight is defined as a launch in which all hardware is functioning properly (drogue chute at apogee, main chute at the intended lower altitude, functioning tracking devices, etc.). Requirements 2.19.1.1-9 SHALL be met during the full-scale demonstration flight:	The team will successfully launch and recover their designed full-scale launch vehicle prior to FRR in its final flight configuration. The team will validate all aspects of the launch vehicle during this flight and meet NASA requirements 2.19.1.1-9.	**(1)** The full-scale rocket is successfully launched and recovered in its final flight configuration. **(2)** Full-scale Rocket meets NASA Requirements 2.19.1.1 - 2.19.1.9.	**(1) Demonstration:** Verify the Launch Vehicle completes a successful launch and recovery event. **(2) Inspection:** Ensure that all hardware functions properly and meets NASA Requirements 2.19.1.1 - 2.19.1.9.	Verified	Project Management	**(1)** A VDF with nominal performance was performed on 3/8/2025. See Section 6.2.3 for VDF recovery photos. **(2)** See Verification Results for NASA Requirements 2.19.1.1 - 2.19.1.9.
2.19.1.1	The vehicle and recovery system SHALL have functioned as designed.	The Integration Lead and Team Lead will verify that the vehicle and payload system functioned as it was designed.	The vehicle and recovery system operate as designed.	**Review:** Inspect flight data from VDF to confirm that the vehicle and recovery system functioned properly (correct deployment of the drogue and main chutes, etc).	Verified	Integration, Project Management	Drogue and main parachute deployment performed nominally during VDF on 3/8/2025. See Figure 6.3 (photo a, b, and c) for confirmation.
2.19.1.2	The full-scale rocket SHALL be a newly constructed rocket, designed and built specifically for this year's project.	The Aerodynamics Lead and Structures Lead will facilitate the design and construction of a new full-scale rocket, built for the purpose of this years NASA SL challenge.	**(1)** Design and construction process documented via photos & CAD models. **(2)** Newly constructed rocket, designed and built for this years challenge.	**(1) Review:** Verify that multiple construction and CAD models are included in report documentation. **(2) Review:** Verify that report documentation have new and purposeful appendices and references.	Verified	Aerodynamics, Structures	**(1) & (2)** See Section 3.5 for the manufacturing process of the Full-scale LV.

Table 8.38: NASA 2024-2025 Vehicle Requirements

NASA Req. No.	Requirement Statement	Planned Action	Verification Success Criteria	Verification Method	Phase	Subsystem Allocation	Verification Results
2.19.1.3.1	During Vehicle Demonstration Flight - If the payload is not flown, mass simulators SHALL be used to simulate the payload mass.	The Payload Team and Structures Lead will use a mass simulator to simulate the payload mass if the payload is not flown during the Vehicle Demonstration Flight.	**(1)** A mass simulator is securely integrated into the launch vehicle if the payload is not flown during the VDF. **(2)** The mass simulator accurately replicates the payload mass and center of gravity (CG) properties. **(3)** The flight dynamics of the vehicle with the mass simulator meet performance expectations (apogee predictions align within acceptable error margins).	**(1) Inspection:** Verify secure integration of the mass simulator and inspect its design to match payload mass and CG specifications if using a mass simulator. **(2) Analysis:** Use simulations (OpenRocket or RockSim) to confirm the mass simulator's impact aligns with predicted outcomes for the payload configuration if using a mass simulator. **(3) Test:** Conduct a VDF with the mass simulator and compare apogee and flight stability with simulation predictions to ensure acceptable performance if using a mass simulator.	Verified	Payload, Structures	**(1), (2), & (3)** The payload was flown in its fully manufactured state during the VDF on 3/8/2025. See Section 6.3 for the PDF payload summary.
2.19.1.3.2	The mass simulators SHALL be located in the same approximate location on the rocket as the missing payload mass.	The Structures lead will place the mass simulators in the same approximate location in the launch vehicle as the missing payload mass.	**(1)** The mass simulator is positioned within the launch vehicle at the same approximate location as the missing payload to ensure accurate center of gravity (CG) replication. **(2)** The vehicle's center of gravity (CG) with the mass simulator matches the expected CG with the payload within an acceptable margin of error.	**(1) Inspection:** Confirm the placement of the mass simulator in the same approximate location as the missing payload. **(2) Measurement:** Measure the center of gravity (CG) of the launch vehicle with the mass simulator and compare it to the expected CG with the payload.	Verified	Structures	The payload was located in its official position in the Nose Coned during VDF. See VDF results in Section 6.
2.19.1.4	If the payload changes the external surfaces of the rocket (such as camera housings or external probes) or manages the total energy of the vehicle, those systems SHALL be active during the full-scale Vehicle Demonstration Flight.	Payload Team and Team Lead ensure that Air Brakes is on the full-scale rocket and is functioning during VDF.	**(1)** Air brakes are installed and integrated into the rocket for the VDF. **(2)** Air brakes are fully functional and actively manage the vehicle's total altitude during the flight.	**(1) Inspection:** Verify the air brakes are installed and operational before the VDF. **(2) Test:** Observe the air brakes' performance during the VDF to confirm proper deployment and functionality.	Verified	Payload, Project Management	The competition payload does not have external surfaces. The experimental payload, Air Brakes, was active during the VDF attempt.
2.19.1.5	Teams SHALL fly the competition launch motor for the Vehicle Demonstration Flight. The team may request a waiver for the use of an alternative motor in advance if the home launch field cannot support the full impulse of the competition launch motor or in other extenuating circumstances.	The Aerodynamics Lead and Team Lead will ensure that the competition launch motor is used for the Vehicle Demonstration Flight. If unable, the Team Lead will request a waiver for the use of an alternative motor from NASA in advance.	**(1)** The competition launch motor is installed and flown during the Vehicle Demonstration Flight (VDF). **(2)** If the competition motor cannot be used, a waiver is submitted and approved by NASA for an alternative motor. **(3)** The alternative motor performs similarly to first motor choice.	**(1) Inspection:** Verify that the competition motor is installed in the launch vehicle before the VDF launch. **(2) Inspection:** Confirm the submission and approval of the waiver for an alternative motor, if applicable. **(3) Analysis:** Compare thrust and impulse data for the alternative motor to ensure compliance with competition requirements if required.	Verified	Aerodynamics, Project Management	The VDF motor is the L1520T and can be seen in Section 1.2.2. It is the same as the final selected motor for the Huntsville launch.

Table 8.38: NASA 2024-2025 Vehicle Requirements

NASA Req. No.	Requirement Statement	Planned Action	Verification Success Criteria	Verification Method	Phase	Subsystem Allocation	Verification Results
2.19.1.6	The vehicle SHALL be flown in its fully ballasted configuration during the full-scale test flight. Fully ballasted refers to the maximum amount of ballast that will be flown during the competition launch flight. Additional ballast SHALL not be added without a re-flight of the full-scale launch vehicle.	The Aerodynamics Lead and Team Lead will ensure that the full-scale launch vehicle is flown in its fully ballasted configuration during the Vehicle Demonstration Flight. The Aerodynamics Lead will not add additional ballast without a re-flight of the full-scale launch vehicle.	**(1)** The full-scale launch vehicle is flown with the maximum ballast configuration during the Vehicle Demonstration Flight (VDF). **(2)** No additional ballast is added without a re-flight of the vehicle. **(3)** The ballast configuration used during the VDF is verified to match the maximum ballast planned for the competition flight.	**(1) Inspection:** Confirm the ballast configuration before the VDF to ensure the correct amount of ballast is used. **(2) Inspection:** Ensure that no additional ballast is added after the VDF unless a re-flight is conducted. **(3) Measurement:** Measure the ballast weight and configuration during the VDF and compare it to the planned competition ballast configuration.	Verified	Aerodynamics, Project Management	The LV was flown with 3.7 lbs. of ballast (maximum ballast configuration) during VDF. The total weight of the LV is 39.7 lbs. See Section 6.2 for VDF results.
2.19.1.7	After successfully completing the full-scale demonstration flight, the launch vehicle or any of its components SHALL not be modified without the concurrence of the NASA management team or Range Safety Officer (RSO).	The team will not modify the launch vehicle or any of its components after completing the full-scale demonstration flight without the approval of the NASA management team or RSO.	**(1)** No modifications are made to the launch vehicle or its components after the full-scale demonstration flight. **(2)** Any proposed modifications are approved by NASA management or the RSO before being implemented.	**(1) Inspection:** Verify that no modifications are made to the launch vehicle or components after the full-scale demonstration flight. **(2) Inspection:** Confirm the approval of any modifications by NASA management or the RSO.	Verified	Project Management	The LV will not undergo any modifications after VDF on 3/8/2025.
2.19.1.8	Proof of a successful flight SHALL be supplied in the FRR report.	The Team Lead will ensure that proof of a successful full-scale demonstration flight is supplied in the FRR report.	FRR report includes proof of a successful full-scale demonstration flight (including flight profile graphs, apogee, etc.).	**Inspection:** Confirm that the flight data provided (apogee, stability) aligns with simulations and is included in FRR.	Verified	Project Management	Proof of a successful VDF is included in Section 6.2. See Figures **??**, 6.1, and 6.2 for the flight profile graphs.
2.19.1.8.1	Altimeter flight profile data output with accompanying altitude and velocity versus time plots is required to meet Requirement 2.19.1.8. Altimeter flight profile graph(s) that are not complete (liftoff through landing) SHALL not be accepted.	The Recovery Lead will include altimeter flight profile data with accompanying altitude and velocity versus time plots in the FRR report for the full-scale launch vehicle.	**(1)** Altimeter flight profile data is provided in the FRR report with accompanying altitude and velocity versus time plots. **(2)** The flight profile graph includes data from liftoff through landing.	**(1) Inspection:** Verify that the altimeter flight profile data is included in the FRR report. **(2) Inspection:** Confirm that the altitude and velocity versus time plots cover the entire flight from liftoff to landing.	Verified	Recovery	**(1) & (2)** The altimeter flight profile graph for the VDF can be seen in Figures **??**, 6.1, and 6.2.
2.19.1.8.2	Quality pictures of the as landed configuration of all sections of the launch vehicle SHALL be included in the FRR report. This includes, but is not limited to: Nose Cone, recovery system, airframe, and booster.	The Recovery Lead and Team Lead will include quality photos of the landing configurations for all parts of the launch vehicle in the FRR report.	**(1)** High-quality pictures of all sections (Nose Cone, recovery system, airframe, booster) in the as-landed configuration are included in the FRR report. **(2)** The pictures are clear, detailed, and capture the full vehicle configuration post-landing.	**(1) Inspection:** Review the FRR report to ensure that high-quality pictures of the landed configuration are included. **(2) Inspection:** Verify that all required sections (Nose Cone, recovery system, airframe, booster) are clearly represented.	Verified	Project Management, Recovery	**(1) & (2)** Recovery photos of the VDF attempt on 3/8/2025 can be found in Figure 6.4.
2.19.1.8.3	Raw altimeter data SHALL be submitted in .csv or .xlsx format.	The Recovery and Team Lead will submit all raw altimeter data is submitted in .csv or .xlsx format.	**(1)** Raw altimeter data is submitted in either .csv or .xlsx format. **(2)** The data is complete and includes all necessary information for flight analysis.	**(1) Inspection:** Verify that the raw altimeter data is submitted in the correct format (.csv or .xlsx). **(2) Inspection:** Check the completeness and quality of the raw data for analysis.	Verified	Project Management, Recovery	See the separately attached raw altimeter data.

Table 8.38: NASA 2024-2025 Vehicle Requirements

NASA Req. No.	Requirement Statement	Planned Action	Verification Success Criteria	Verification Method	Phase	Subsystem Allocation	Verification Results
2.19.1.9	Vehicle Demonstration flights SHALL be completed by the FRR submission deadline. No exceptions SHALL be made. If the Student Launch office determines that a Vehicle Demonstration Re-flight is necessary, then an extension may be granted. THIS EXTENSION IS ONLY VALID FOR RE-FLIGHTS, NOT FIRST TIME FLIGHTS. Teams completing a required re-flight SHALL submit an FRR Addendum by the FRR Addendum deadline.	The team will complete the Vehicle Demonstration flights by the FRR submission deadline.	**(1)** The Vehicle Demonstration flight is completed by the FRR submission deadline. **(2)** If a re-flight is required, it is completed with an FRR Addendum submitted by the Addendum deadline. **(3)** Extensions are only requested for re-flights and not for the first-time flight.	**(1) Inspection:** Confirm the completion of the Vehicle Demonstration flight by the FRR submission deadline. **(2) Inspection:** Ensure that an FRR Addendum is submitted if a re-flight occurs.	Verified	Project Management	The VDF attempt occurred on 3/8/2025 (prior to FRR submission deadline).
2.19.2	Payload Demonstration Flight— All teams SHALL successfully launch and recover their full-scale rocket containing the completed payload prior to the Payload Demonstration Flight deadline. The rocket flown SHALL be the same rocket to be flown as their competition launch. The purpose of the Payload Demonstration Flight is to prove the launch vehicle's ability to safely retain the constructed payload during flight and to show that all aspects of the payload perform as designed. A successful flight is defined as a launch in which the rocket experiences stable ascent and the payload is fully retained until it is deployed (if applicable) as designed. Requirements 2.19.2.1-4 SHALL be met during the Payload Demonstration Flight.	The team will launch and recover their full-scale rocket containing the completed payload prior to the Payload Demonstration Flight deadline. The Payload Team and Structures Team will ensure that the launch vehicle and payload flown are to be flown the exact same as their competition launch.	**(1)** The rocket experiences a stable ascent and smooth recovery events. **(2)** The payload is retained as designed throughout the flight until deployment (if applicable).	**(1) Demonstration:** Proof of successful Payload Demonstration Flight shown in FRR document. **(2) Inspection:** Post-flight payload retention verification proof shown in FRR document.	Verified	Payload, Project Management, Structures	A PDF attempt was performed on 3/8/2025. The payload remained fully contained for the entirety of the flight. See Section 6.3 for the PDF results.
2.19.2.1	The payload shall be fully retained until the intended point of deployment (if applicable), all retention mechanisms shall function as designed, and the retention mechanism shall not sustain damage requiring repair.	The Payload Team does not design a jettisoning payload.	The payload does not jettison.	**Inspection:** Payload is designed not to jettison.	Verified	Integration, Payload	The payload remained fully encased in the Nose Cone for the entire flight (PDF). See Section 6.3 for more PDF details.
2.19.2.2	The payload flown shall be the final, active version.	The Payload Team and Team Lead will ensure that the payload flown during the Payload Demonstration Flight is the final, active version of the payload.	**(1)** The payload flown matches the finalized design. **(2)** The payload is active and functional during flight.	**(1) Inspection:** Inspect payload design prior to PDF. **(2) Demonstration:** Demonstrate proper collection and transmission during PDF flight, providing proof in FRR.	Verified	Payload, Project Management	The payload flown is the final structural version. See Section 4.5 for the manufactured payload details.
2.19.2.3	If Requirements 2.19.2.1-2 are met during the original Vehicle Demonstration Flight, occurring prior to the FRR deadline and the information is included in the FRR package, the additional flight and FRR Addendum SHALL not be required.	The team will adhere to and meet NASA Requirements 2.19.2.1-2. The Team Lead will ensure all criteria for the VDF are complete and submitted before the FRR deadline. If the criteria is not properly met, the team will submit an additional flight and an FRR Addendum.	**(1)** All required data from the original Vehicle Demonstration Flight is complete. **(2)** The data is accurate and included in the FRR package by the deadline.	**Review:** Confirm VDF data is detailed and complete in FRR report document.	Verified	Project Management	VDF data is complete and can be found in Section 6.2.

Table 8.38: NASA 2024-2025 Vehicle Requirements

NASA Req. No.	Requirement Statement	Planned Action	Verification Success Criteria	Verification Method	Phase	Subsystem Allocation	Verification Results
2.19.2.4	Payload Demonstration Flights SHALL be completed by the FRR Addendum deadline. NO EXTENSIONS SHALL BE GRANTED.	The team will complete the Payload Demonstration Flights by the FRR Addendum deadline.	The Payload Demonstration Flight is successfully completed before the FRR Addendum deadline.	**Demonstration:** PDF submitted by FRR addendum deadline.	Verified	Project Management	The PDF attempt occurred on 3/8/2025 (prior to FRR Addendum deadline).
2.20	An FRR Addendum SHALL be required for any team completing a Payload Demonstration Flight or NASA required Vehicle Demonstration Re-flight after the submission of the FRR Report.	The team will submit an FRR Addendum if the team needs to complete a Payload Demonstration Flight or a NASA required Vehicle Demonstration Re-flight after the FRR Report.	A complete FRR Addendum is submitted by the deadline if required.	N/A	N/A	Project Management	N/A
2.20.1	Teams required to complete a Vehicle Demonstration Re-Flight and failing to submit the FRR Addendum by the deadline SHALL not be permitted to fly a final competition launch.	The team will complete a Vehicle Demonstration Re-Flight, if required, and submit it by the FRR Addendum deadline.	The FRR Addendum is submitted on time.	N/A	N/A	Project Management	N/A
2.20.2	Teams who complete a Payload Demonstration Flight which is not fully successful may petition the NASA RSO for permission to fly the payload during launch week. Permission SHALL not be granted if the RSO or the Review Panel have any safety concerns.	The team will petition the NASA RSO for permission to fly the payload during launch week if the Payload Demonstration Flight is not fully successful.	**(1)** The petition is submitted to the NASA RSO. **(2)** Permission is granted by the NASA RSO, with no outstanding safety concerns.	N/A	N/A	Project Management	N/A
2.21	The team's name and Launch Day contact information SHALL be in or on the rocket airframe as well as in or on any section of the vehicle that separates during flight and is not tethered to the main airframe. This information SHALL be included in a manner that allows the information to be retrieved without the need to open or separate the vehicle.	The Team Lead will verify that the team's name and contact information is in the rocket airframe and any section of the launch vehicle that separates during flight and is not tethered to the main airframe.	**(1)** The team's name and contact information are visible. **(2)** The information is retrievable from all required sections of the vehicle without opening or separating components.	Inspection: Inspect the internal launch vehicle air frame for contact information and include photos in documentation.	Verified	Project Management	The team name and contact information is written inside all separating sections of the Full-scale LV.
2.22	All Lithium Polymer batteries SHALL be sufficiently protected from impact with the ground and SHALL be brightly colored, clearly marked as a fire hazard, and easily distinguishable from other payload hardware.	The Team Lead and Safety Officer will ensure that all Lithium Polymer batteries are sufficiently protected from impact with the ground. All Lithium Polymer batteries will be brightly colored and clearly marked to make it distinguishable from other payload hardware.	**(1)** All Lithium Polymer batteries are brightly colored and clearly marked as fire hazards. **(2)** Batteries are sufficiently protected from ground impact.	**Inspection:** Inspection of all LiPo batteries for protection and labels.	Verified	Project Management, Safety	All LiPos are labeled and marked with brightly colored tape.
2.23.1	The launch vehicle SHALL not utilize forward firing motors.	The Aerodynamics Lead will design the launch vehicle to not utilize forward firing motors.	The selected motor/s is not a forward firing motor/s.	**Inspection:** Verify propulsion system design meets requirement.	Verified	Aerodynamics	The Full-scale LV does not use a forward firing motor. The Full-scale LV uses an L1520T motor. See Section 1.2.2 for final motor selection.
2.23.2	The launch vehicle SHALL not utilize motors that expel titanium sponges (Sparky, Skidmark, MetalStorm, etc.)	The Aerodynamics Lead will design the launch vehicle to not utilize motors that expel titanium sponges.	A motor is selected that does not expel titanium sponges.	**Inspection:** Verify propulsion system design meets requirement.	Verified	Aerodynamics	The Full-scale LV uses an L1520T motor. See Section 1.2.2 for final motor selection.

Table 8.38: NASA 2024-2025 Vehicle Requirements

NASA Req. No.	Requirement Statement	Planned Action	Verification Success Criteria	Verification Method	Phase	Subsystem Allocation	Verification Results
2.23.3	The launch vehicle SHALL not utilize hybrid motors.	The Aerodynamics Lead will design the launch vehicle to not utilize hybrid motors.	A hybrid motor is not used in the launch vehicle propulsion system.	**Inspection:** Verify propulsion system design meets requirement.	Verified	Aerodynamics	The LV does not utilize hybrid motors. The Full-scale LV uses an L1520T motor. See Section 1.2.2 for final motor selection.
2.23.4	The launch vehicle SHALL not utilize a cluster of motors.	The Aerodynamics Lead will design the launch vehicle to not use a cluster of motors.	A cluster of motors is not used in the launch vehicle propulsion system.	**Inspection:** Verify propulsion system design meets requirement.	Verified	Aerodynamics	The Full-scale LV uses a single-firing motor. The Full-scale LV uses an L1520T motor. See Section 1.2.2 for final motor selection.
2.23.5	The launch vehicle SHALL not utilize friction fitting for motors.	The Structures Lead will construct the launch vehicle to not utilize friction fitting for motors. A reusable casing mechanism will be designed to house a motor.	**(1)** The launch vehicle incorporates a motor retainer or retention device. **(2)** Friction fitting is not utilized for motor retention.	**Inspection:** Verify propulsion system design meets requirement.	Verified	Structures	See Section 3.3.10 for motor retainer design.
2.23.6	The launch vehicle SHALL not exceed Mach 1 at any point during flight.	The Aerodynamics Lead will design the launch vehicle and select a motor such that Mach 1 is not exceeded at any point during the flight.	**(1)** All flight simulations show a max velocity under Mach 1. **(2)** During all flight operations, the launch vehicle does not exceed Mach 1.	**(1) Analysis:** Analyze the velocity of launch vehicle in OpenRocket and RockSim throughout the entirety of its flight. **(2) Demonstration:** Demonstrate requirement with subscale, VDF, and PDF.	Verified	Aerodynamics	**(1)** The maximum velocity in simulations for the Full-scale LV is 609.6 fps or 0.54 mach. See Section 3.7.3 for the velocity flight analysis. **(2)** The maximum velocity during VDF/PDF was 446.92 fps or 0.40 mach. See Section 6.2.2 for max velocity during the Full-scale flight.
2.23.7	Vehicle ballast SHALL not exceed 10% of the total unballasted weight of the rocket, as it would sit on the pad (i.e., a rocket with an unballasted weight of 40 lbs. on the pad may contain a maximum of 4 lbs. of ballast).	The Aerodynamics Lead will design the launch vehicle such that the vehicle ballast does not exceed 10% of the total unballasted weight of the rocket.	The total vehicle ballast is ≤10% of the un-ballasted weight of the rocket.	**(1) Measurement:** Calculate total rocket weight and total designed ballast weight. **(2) Inspection:** Inspect total ballast weight flown during VDF and PDF.	Verified	Aerodynamics	**(1)** The maximum ballast of the Full-scale LV is 3.7 lbs. and the manufactured LV weight is 39.7 lbs. **(2)** The total weight flown during VDF was 3.7 lbs. See Section 6.2 for VDF details.
2.23.8	Transmissions from on-board transmitters, which are active at any point prior to landing, SHALL not exceed 250 mW of power (per transmitter).	The Payload Team and Recovery Lead will verify that any transmission from on-board transmitters will not exceed 250 mW of power (per transmitter) prior to the landing of the launch vehicle.	**(1)** Each transmitter operates at ≤250 mW of power during the flight. **(2)** The power output is verified through testing.	**Test:** Verify power output via electronic tests prior to flights/launches.	Verified	Payload, Recovery	Transmissions do not exceed 250 mW of power prior to landing. See Section 4.5.2 for payload transmission details.
2.23.9	Transmitters SHALL not create excessive interference. Teams SHALL utilize unique frequencies, handshake/passcode systems, or other means to mitigate interference caused to or received from other teams.	The Payload Team and Recovery Lead will verify that all transmitters used will not create excessive interference. All information being transmitted shall use unique frequencies, passcode systems, or other relevant systems to reduce interference.	**(1)** All transmitters operate on unique frequencies to prevent interference with other teams. **(2)** A handshake/passcode system or equivalent is implemented to mitigate interference. **(3)** No excessive interference is detected during testing or operations.	**(1) Inspection:** Confirm the ability to change frequencies and/or handshake/passcode systems during transmitter setup in payload design. **(2) & (3) Test:** Conduct interference tests to verify that no excessive interference is caused to or received from other teams.	Verified	Payload, Recovery	The avionics GPS utilizes a unique frequency to prevent interference (approved by NASA). The payload also uses unique methods to minimize interference. See Section 4.5.2 for the payload transmission design.

Table 8.38: NASA 2024-2025 Vehicle Requirements

NASA Req. No.	Requirement Statement	Planned Action	Verification Success Criteria	Verification Method	Phase	Subsystem Allocation	Verification Results
2.23.10	Excessive and/or dense metal SHALL not be utilized in the construction of the vehicle. Use of lightweight metal SHALL be permitted but limited to the amount necessary to ensure structural integrity of the airframe under the expected operating stresses.	The Structures Lead will not use excessive and/or dense metal in the construction of the launch vehicle. Only the use of lightweight metal will be allowed into the design and construction of the launch vehicle.	**(1)** Materials consist primarily of lightweight metals and non-metal materials. **(2)** Dense metals are used only where necessary for structural integrity.	**(1) Review:** Review material selection documentation to confirm the primary use of lightweight metals and non-metal materials. **(2) Review:** Review high stress locations and verify heavy metals are used sparingly in the designated area.	Verified	Structures	**(1)** See Section 3.5 for material selection of launch vehicle. **(2)** See Section 3.5.9 for Fin Can design. Fin Can is the location of the most metal in the Launch Vehicle.

Table 8.39: NASA 2024-2025 Recovery Requirements

NASA Req No.	Requirement Statement	Planned Action	Verification Success Criteria	Verification Method	Phase	Subsystem Allocation	Verification Results
3.1	The full-scale Launch Vehicle SHALL stage the deployment of its recovery devices, where a drogue parachute is deployed at apogee, and a main parachute is deployed at a lower altitude. Tumble or streamer recovery from apogee to main parachute deployment is also permissible, provided that kinetic energy during drogue stage descent is reasonable, as deemed by the RSO.	The Recovery Lead will design a dual deploy recovery system using two altimeters, one serving as a primary altimeter and one serving as a secondary backup altimeter. The drogue parachute will be deployed at apogee and the main parachute deployed above 500 ft.	**(1)** Drogue parachute is deployed at apogee. **(2)** Main parachute is deployed at an altitude above 500 ft.	**(1) Demonstration:** Demonstrate drogue parachute deployment at apogee with subscale, VDF, and PDF. **(2) Demonstration:** Demonstrate main parachute deployment above 500 ft with subscale, VDF, and PDF.	Verified	Recovery	**(1) & (2)** Drogue and main parachute performed nominally during the VDF flight on 3/8/2025. See Figure 6.3 for visual confirmation and Figures 6.1, 6.2, and 6.1 for the altimeter data graphs.
3.1.1	The main parachute SHALL be deployed no lower than 500 ft.	The Recovery Lead will program the primary altimeter to deploy the main parachute at 550 ft. and the secondary altimeter to deploy the main parachute at 500 ft.	Main parachute deployment occurs at or above 500 ft.	**(1) Demonstration:** Demonstrate with subscale, VDF, and PDF. **(2) Analysis:** Analysis of Avionics Bay electronics and flight data.	Verified	Recovery	**(1)** Main parachute performed nominally during the VDF flight on 3/8/2025. It deployed at 550 ft and both the primary and secondary charges blew. **(2)** See Figure 6.1 for the primary altimeter flight data.
3.1.2	The apogee event SHALL contain a delay of no more than 2 sec.	The Recovery Lead will program the primary altimeter to deploy the drogue parachute with a 0 second delay from apogee. Similarly, the secondary altimeter will be programmed to deploy the drogue parachute 1 second after apogee.	The apogee event contains a delay of no more than 2 seconds.	**(1) Demonstration:** Demonstrate with subscale, VDF, and PDF. **(2) Analysis:** Analyze the altimeter flight data for subscale, VDF, and PDF.	Verified	Recovery	**(1)** Drogue parachute performed nominally during the VDF flight on 3/8/2025. Apogee was recorded at 3571 feet. **(2)** See Figure 6.1 for the primary altimeter flight data. The apogee event had a delay smaller than 2 seconds and the secondary main deployment charge occurred at 1 second after apogee.
3.1.3	Motor ejection is not a permissible form of primary or secondary deployment.	The Recovery Lead will design a dual deploy recovery system controlled by two altimeters, not motor ejection.	Launch Vehicle is not designed to use motor ejection for primary or secondary deployment.	**Inspection:** Inspect the launch vehicle motor retention and drogue parachute deployment design.	Verified	Recovery	The Full-scale design uses an L1520T and a dual deployment recovery. See Section 3.6.1 for the final recovery system design that does not include motor ejection.

Table 8.39: NASA 2024-2025 Recovery Requirements

NASA Req. No.	Requirement Statement	Planned Action	Verification Success Criteria	Verification Method	Phase	Subsystem Allocation	Verification Results
3.2	Each team shall perform a successful ground ejection test for all electronically initiated recovery events prior to the initial flights of the subscale and full-scale vehicles.	The Recovery Lead will perform ground ejection tests prior to every vehicle launch.	Ground ejection tests will be successfully performed for all recovery events for subscale, VDF, and PDF launches.	**Demonstration:** Perform the ground ejection test and record the successful test for inclusion in the CDR and FRR milestones.	Verified	Recovery	An ejection test was performed prior to all Subscale and Full-scale launches. A successful Full-scale ejection test was performed on 3/3/2025. See Section 8.1.13 for the Full-scale Ejection Test.
3.3	Each independent section of the launch vehicle shall have a maximum kinetic energy of 75 ft-lbf at landing. Teams whose heaviest section of their launch vehicle, as verified by Vehicle Demonstration Flight data, stays under 65 ft-lbf will be awarded bonus points.	The Recovery Lead will design a recovery system to use parachutes large enough such that the heaviest section of the launch vehicle's kinetic energy does not exceed 75 ft-lbf.	Each individual launch vehicle section lands with a kinetic energy below 65 ft-lbs.	**Analysis:** Analysis of kinetic energy at landing via altimeter flight graphs.	Verified	Recovery	The calculated maximum kinetic energy is 60.4 ft-lbf. See Table 3.13 for planned kinetic energies of each individual section.
3.4	The recovery system SHALL contain redundant, commercially available barometric altimeters that are specifically designed for initiation of rocketry recovery events.	The Recovery Lead will design a recovery system that uses two separate commercially available barometric altimeters designed for rocketry recovery events that function on two separate electronic circuits.	The recovery system design includes two separate commercially available barometric altimeters.	**Inspection:** Inspect recovery system design prior to construction.	Verified	Recovery	The recovery avionics contains redundancy. This includes a primary and secondary altimeter connected to a primary and secondary ejection charge for both drogue and main deployment events. See Figures 3.84 and 3.85 for the final recovery system and avionics design.
3.5	Each altimeter SHALL have a dedicated power supply, and all recovery electronics SHALL be powered by commercially available batteries.	The Recovery Lead will design the recovery system such that each of the altimeters have their own independent commercially available batteries that function on separate circuits.	The recovery system design includes two separate commercially available batteries, one for each individual altimeter.	**Inspection:** Inspect Avionics Bay power supply design.	Verified	Recovery	The primary altimeter's power supply is a single 9V alkaline battery and the secondary altimeter's power supply is a 7.4V 400 mAh LiPo. See Section 3.6.6 for final recovery system and avionics design.
3.6	Each altimeter SHALL be armed by a dedicated mechanical arming switch that is accessible from the exterior of the rocket airframe when the rocket is in the launch configuration on the launch pad.	The Recovery Lead will design the recovery system such that each of the altimeters are armed using pull pin switches that can be accessed from the exterior of the launch vehicle's airframe.	Pull pin switches are used on launch day to arm altimeters.	**Inspection:** Inspect launch vehicle switch band prior to launch.	Verified	Recovery	A pull-pin switch is used to arm the avionics altimeters. See Steps 8.23 & 8.25 of the Full-scale Launch Day Checklist (Section 7.2) for the arming process.
3.7	Each arming switch SHALL be capable of being locked in the ON position for launch (i.e., cannot be disarmed due to flight forces).	The Recovery Lead will choose arming switches that can lock in the ON position for the entirety of the flight.	Pull pin switches are ON for the entirety of the flight.	(1) Inspection: Inspect launch vehicle switchband and arming switch. (2) Inspection: Inspect altimeter flight graph after landing.	Verified	Recovery	(1) & (2) A pull-pin switch is used to arm the avionics altimeters. See Steps 8.23 & 8.25 of the Full-scale Launch Day Checklist (Section 7.2) for the arming process.
3.8	The recovery system, GPS and altimeters, and electrical circuits SHALL be completely independent of any payload electrical circuits.	The Recovery Lead will design the recovery system such that both altimeters and the GPS function on circuits independent from any payload electrical circuits.	Recovery electronics are independent of all payload electronic circuits.	**Inspection:** Inspect Avionics Bay GPS and altimeter circuits.	Verified	Recovery	The payload and avionics bay are located in completely separate parts of the rocket. See Section 3.6.6 for a section breakdown.

Table 8.39: NASA 2024-2025 Recovery Requirements

NASA Req. No.	Requirement Statement	Planned Action	Verification Success Criteria	Verification Method	Phase	Subsystem Allocation	Verification Results
3.9	Removable shear pins SHALL be used for both the main parachute compartment and the drogue parachute compartment.	The Recovery Lead will design the recovery system to utilize shear pins on the connection points for the main parachute compartment and the drogue parachute compartment.	Shear pins are used and broken during all full-scale and subscale flights.	**Inspection:** Inspect Launch Vehicle separation points before and after launch.	Verified	Recovery	All in-flight separation points utilize shear pins. See Section 3.3.1 for the separation points of the launch vehicle and connection hardware.
3.10	Bent eye bolts SHALL not be permitted in the recovery subsystem.	The Recovery Lead shall confirm that no bent eye bolts are utilized anywhere within the recovery subsystem.	Only forged/cast eye bolts are used in the recovery system.	**Inspection:** Inspect eye bolts prior to design and installation.	Verified	Recovery	See Figure 3.81 for the final recovery system design including no bent eye bolts.
3.11	The recovery area SHALL be limited to a 2,500 ft. radius from the launch pads.	The Recovery Lead will design the recovery system to utilize parachutes appropriately sized to ensure that the launch vehicle does not drift more than 2,500 ft. from the launch pads during descent.	**(1)** Max drift distance and main parachute at apogee scenario remains within the given perimeter. **(2)** All subscale, VDF, and PDF flights land within the given perimeter.	**(1) Analysis:** Calculate max drift distance under high wind and main at apogee. **(2) Demonstration:** Demonstrate landing radius with subscale, VDF, and PDF.	Verified	Recovery	**(1)** See Section 3.7.8 for the Full-scale max drift distance. **(2)** The max drift distance during VDF was 951.4 ft from the launch pad with 20 mph winds.
3.12	Descent time of the launch vehicle SHALL be limited to 90 sec (apogee to touch down). Teams whose launch vehicle descent, as verified by Vehicle Demonstration Flight data, stays under 80 sec will be awarded bonus points.	The Recovery Lead will design the recovery system to utilize parachutes appropriately sized to ensure that the launch vehicle descends to the ground in under 90 sec.	**(1)** Parachutes are sized to bring down the Launch Vehicle in <80 seconds. **(2)** All subscale, VDF, and PDF flights land before 80 seconds.	**(1) Analysis:** Descent times for selected parachutes are lower than 80 seconds. **(2) Demonstration:** Demonstrate descent time with subscale, VDF, and PDF.	Verified	Recovery	**(1)** See Section 3.6.2 for full-scale parachute calculations. **(2)** The total descent time for the VDF launch was 54.7 seconds. See Section 3.7.7 for Full-scale descent time calculations.
3.13	An electronic GPS tracking device SHALL be installed in the launch vehicle and will transmit the position of the tethered vehicle or any independent section to a ground receiver.	The Recovery Lead will design the recovery system to utilize an electronic GPS in each separating section of the launch vehicle.	**(1)** GPS transmits launch pad coordinates while on launch pad. **(2)** GPS shows approximate rocket location after touch-down.	**(1) Inspection:** Inspect Launch Day Checklist for confirmed continuity. **(2) Demonstration:** Document GPS coordinates at launch and at landing in documentation.	Verified	Recovery	**(1) & (2)** The GPS launch pad and landing coordinates are recorded during launch day checklist. See Steps 8.4 and 9.13 of the utilized Full-scale Launch Day Checklist (Appendix 9.1.2) for confirmation.
3.13.1	Any rocket section or payload component, which lands untethered to the launch vehicle, SHALL contain an active electronic GPS tracking device.	The Recovery Lead will utilize an electronic GPS in each separation section of the launch vehicle.	**(1)** The rocket is designed to come down in three sections that are tethered together. **(2)** The rocket contains one GPS in the AVAB.	**(1) Review:** Confirm recovery design is all tethered together in report documentation. **(2) Inspection:** Ensure a GPS is included in the designed AVAB.	Verified	Recovery	**(1)** The LV remains fully attached during descent. See Figures 3.78, 3.80, and 6.3 for recovery system design. **(2)** See Section 3.6.6 for AVAB electronics design.
3.13.2	The electronic GPS tracking device(s) SHALL be fully functional during the official competition launch.	The Recovery Lead will test all electronic GPS tracking device(s) after the vehicle is fully assembled before every launch.	**(1)** GPS transmits coordinates on the launch pad. **(2)** Accurate GPS data from launch to recovery.	**(1) Inspection:** Inspect Launch Day Checklist for confirmed continuity. **(2) Inspection:** Confirm complete and accurate GPS data is included in report documentation.	Verified	Recovery	**(1) & (2)** GPS continuity is confirmed prior to launch and data is recorded. See Steps 1.59, 8.4, 8.22 and 9.13 of the utilized Full-scale Launch Day Checklist (Appendix 9.1.2) for confirmation.

Table 8.39: NASA 2024-2025 Recovery Requirements

NASA Req. No.	Requirement Statement	Planned Action	Verification Success Criteria	Verification Method	Phase	Subsystem Allocation	Verification Results
3.14	The recovery system electronics SHALL not be adversely affected by any other on-board electronic devices during flight (from launch until landing).	The Recovery Lead will design the recovery system such that none of the recovery system electronics are influenced by other on-board electronic devices.	**(1)** All recovery electronics work as intended during the entire duration of any launch. **(2)** Launch data is complete from launch to landing.	**(1) Demonstration:** Demonstrate successful flight with subscale, VDF, and PDF. **(2) Inspection:** Confirm complete recovery system electronics data from every flight.	Verified	Recovery	**(1) & (2)** The avionics electronics does not interfere with any other on-board electronic devices. A foil sheet separates the avionics and Air Brake bulkheads. Additionally, full avionics data was recorded during VDF. See the separately attached raw altimeter data.
3.14.1	The recovery system altimeters SHALL be physically located in a separate compartment within the vehicle from any other radio frequency transmitting device and/or magnetic wave producing device.	The Recovery Lead will design the recovery system such that all altimeters are physically located in a separate compartment from all other non-recovery on-board electronics.	**(1)** Altimeters are located in a separate compartment or physically located separately from other electronics. **(2)** Altimeters work as designed during all tests and flights.	**(1) Inspection:** Inspect altimeter design location and constructed compartment. **(2) Demonstration:** Show multiple successful flights and data collections with subscale, VDF, and PDF.	Verified	Recovery	**(1) & (2)** The altimeters are physically spaced and separated from other electronics, as seen in Figure 3.83. The design worked nominally during VDF. See the separately attached raw altimeter data and Figure 6.1 for the graphed altimeter data.
3.14.2	The recovery system electronics SHALL be shielded from all on-board transmitting devices to avoid inadvertent excitation of the recovery system electronics.	The Recovery Lead will design the recovery system such that the recovery system electronics are shielded from all on-board transmitting devices.	**(1)** AVAB design includes a specific ”shield” mechanism. **(2)** Recovery system electronics work as designed during tests and flights.	**(1) Inspection:** Inspect design documentation and ensure some form of shield is placed between recovery electronics and other on-board transmitting devices. **(2) Demonstration:** Show multiple successful flights with the final shield mechanism.	Verified	Recovery	**(1)** A sheet of foil is placed between the Air Brake electronics and avionics, along with a 3D printed bulkhead. See Figure 3.82 for AVAB design. **(2)** The design worked nominally during VDF. See the separately attached raw altimeter data and Figure 6.1 for the graphed altimeter data.
3.14.3	The recovery system electronics SHALL be shielded from all on-board devices which may generate magnetic waves (such as generators, solenoid valves, and Tesla coils) to avoid inadvertent excitation of the recovery system.	The Recovery Lead will design the recovery system such that the recovery system electronics are shielded from all on-board magnetic wave generating devices.	**(1)** AVAB design includes a specific ”shield” mechanism. **(2)** Recovery system electronics work as designed during tests and flights.	**(1) Inspection:** Inspect design documentation and ensure some form of shield is placed between recovery electronics and other on-board devices. **(2) Demonstration:** Show multiple successful flights with the final shield mechanism.	Verified	Recovery	**(1)** A sheet of foil is placed between the Air Brake electronics and avionics, along with a 3D printed bulkhead. See Figure 3.82 for manufactured AVAB design. **(2)** The design worked nominally during VDF. See the separately attached raw altimeter data and Figure 6.1 for the graphed altimeter data.

Table 8.39: NASA 2024-2025 Recovery Requirements

NASA Req. No.	Requirement Statement	Planned Action	Verification Success Criteria	Verification Method	Phase	Subsystem Allocation	Verification Results
3.14.4	The recovery system electronics SHALL be shielded from any other on-board devices which may adversely affect the proper operation of the recovery system electronics.	The Recovery Lead will design the recovery system such that the recovery system electronics are shielded from all on-board devices which may adversely affect the proper operation of the recovery system electronics.	**(1)** AVAB design includes a specific ”shield” mechanism. **(2)** Recovery system electronics work as designed during tests and flights.	**(1) Inspection:** Inspect design documentation and ensure some form of shield is placed between recovery electronics and other on-board devices. **(2) Demonstration:** Show multiple successful flights with the final shield mechanism.	Verified	Recovery	**(1)** A sheet of foil is placed between the Air Brake electronics and avionics, along with a 3D printed bulkhead. See Section 3.6.6 for AVAB design. **(2)** The design worked nominally during VDF. See the separately attached raw altimeter data and Figure 6.1 for the graphed altimeter data.

Table 8.40: NASA 2024-2025 Payload Requirements

NASA Req No.	Requirement Statement	Planned Action	Verification Success Criteria	Verification Method	Phase	Subsystem Allocation	Verification Results
4.1	USLI PAYLOAD MISSION OBJECTIVE- College/University Division teams SHALL design, build, and fly a STEMnaut flight capsule capable of safely retaining four STEMnauts and transmitting, via radio frequency, relevant rocket and STEMnaut landing site data to a NASA-owned receiver located at the launch site. STEMnauts SHALL be physical representations of the crew onboard the rocket. The method(s) and design(s) utilized to complete the payload mission SHALL be at the team’s discretion, permitted so long as the designs are deemed safe, comply with FAA and legal requirements, and adhere to the intent of the challenge. NASA reserves the right to require modifications to any proposed payload.	The team will design a flight capsule to safely house four STEMnauts. A microcontroller will collect and store data for transmission. Safety reviews will be conducted.	**(1)** STEMnaut flight capsule safely retains four STEMnauts during flight. **(2)** STEMnaut flight capsule transmits relevant data to a NASA-owned receiver. **(3)** STEMnaut flight capsule is deemed safe and complies with FAA and legal requirements.	**(1) Demonstration:** Conduct test flights and confirm the capsule safely retains four STEMnauts during flight. **(2) Test:** Verify the capsule’s data transmission system during PDF. **(3) Demonstration:** Conduct test flights to demonstrate that the capsule is safe and complies with legal requirements.	Verified	Payload Team	**(1)** Conducted a Nose Cone with STEMCRaFT impact test on 2/20/2025. The STEMnauts remained fully retained. See Section 8.2.11 for the test results. **(2)** Multiple transmission tests were performed. See Sections 8.2.2, 8.2.4, and 8.2.6 for the STEMCRaFT transmission test results. **(3)** See Section 6.3 for the Payload Demonstration Flight results The capsule remained fully intact and contained for the duration of the flight.
4.2.1	Teams SHALL choose a minimum of 3 pieces of data from the below list to a maximum of 8 to transmit to the NASA receiver. • Time of landing • Maximum velocity • Landing velocity, G-forces sustained • Calculated STEMnaut crew survivability • Temperature of landing site • Apogee reached • Battery check/power status • Orientation of on-board STEMnauts	The team will transmit time of landing, maximum velocity, landing velocity, G-forces sustained, temperature, apogee reached, battery status, and orientation of STEMnauts.	**(1)** Payload capsule includes sensors to record a minimum of 3 (maximum of 8) data pieces. **(2)** Payload capsule includes transmission devices to transmit chosen data.	**(1) Review:** Verify design documentation to ensure 3 to 8 data points are included. **(2) Review:** Verify design documentation to confirm the inclusion of transmission devices.	Verified	Payload Team	**(1)** See Section 4.5.2 for Payload Capsule electronic data collection design. **(2)** See Sections 4.5.2 and 4.3.1 for the Payload Capsule transmission design.

Table 8.40: NASA 2024-2025 Payload Requirements

NASA Req. No.	Requirement Statement	Planned Action	Verification Success Criteria	Verification Method	Phase	Subsystem Allocation	Verification Results
4.2.2	The payload SHALL not have any protrusions from the vehicle prior to apogee that extend beyond a quarter inch exterior to the airframe.	The Payload Structural Integration Lead will ensure no protrusions beyond a quarter inch prior to apogee.	The Payload Capsule design does not include any protrusions.	**Review:** Verify design documentation to confirm no protrusions are present in the payload design.	Verified	Payload Structural Integration	The only external payload protrusion is a camera on the Nose Cone. It has a permanent external protrusion length of 0.42 inches (the rail buttons are 0.49 inches). See Section 4.5.1 for final Payload Capsule and integration design.
4.2.3	Payload SHALL transmit on the 2-M band. A specific frequency SHALL be given to the teams later. NASA SHALL use the FTM-300DR transceiver.	The team will design for transmissions to the FTM-300DR receiver on the 2-M band.	**(1)** Payload transmits on the 2-M band. **(2)** Payload has the ability to change transmission frequency.	**(1) Review:** Verify payload design transmits on the 2-M band and is included in CDR documentation. **(2) Review:** Verify payload design includes the capability to change the transmission frequency.	Verified	Payload Team	**(1) & (2)** The payload transmits on the 2-M band and has the ability to change transmission frequency prior to launch. The team plans to use APRS at the standard 144.39 MHz frequency, but can be configured to transmit on other frequencies prior to launch. See Sections 4.3.3 and 4.5.2 for the final payload transmission design.
4.2.4	All transmissions SHALL start and stop with team member call sign.	The system will be programmed to initiate and terminate transmissions with the team member call sign.	**(1)** Payload can change call signs. **(2)** Payload starts and stops transmission with the inputted call sign.	**(1) Review:** Verify design documentation to confirm that the payload is capable of changing call signs. **(2) Demonstration:** Test the payload system to ensure transmissions start and stop with the inputted call sign.	Verified	Payload Systems	The payload software has the ability to change call-signs prior to flight and starts/stops a transmission with the entered call sign. See Sections 4.5.2 and 4.3.1 for the current payload transmission design.
4.2.5	Teams SHALL submit a list of what data they will attempt to transmit by NASA receiver by March 17.	The team will submit a list of selected data points to NASA by the deadline.	A list of data points to be transmitted is submitted by the March 17 deadline	**Inspection:** Verify submission of the data list to NASA by reviewing the submission confirmation or email.	Verified	Payload Team	The list of data points will be submitted to NASA by the March 17th deadline. See Section 4.5 for current data point collection design.
4.2.6	Teams SHALL transmit with a maximum of 5W and transmissions SHALL not occur prior to landing.	The team ensures no transmissions before landing and that power does not exceed 5W.	**(1)** Transmissions occur only after landing. **(2)** Transmission power does not exceed 5W	**(1) Inspection:** Verify that transmission timing is programmed to start after landing through design documentation or testing data. **(2) Test:** Confirm transmission power does not exceed 5W through operational testing or review of payload specifications.	Verified	Payload Electronics & Systems	The payload transmitter is designed with a minimum of 4W and has a transmission time hard-coded into the software. See Section 4.5.2 for current payload transmission design.

Table 8.40: NASA 2024-2025 Payload Requirements

NASA Req. No.	Requirement Statement	Planned Action	Verification Success Criteria	Verification Method	Phase	Subsystem Allocation	Verification Results
4.2.6.1	Teams SHALL not transmit on the specified NASA frequency on launch day prior to landing.	The team ensures no transmission on the NASA frequency prior to landing.	**(1)** No transmission on the specified NASA frequency prior to landing. **(2)** Payload code has minimum period that the payload must be armed before progressing to a landed state to prevent accidental transmission. **(3)** Non-NASA communicating transceivers must not be on the 2M band.	**Inspection:** Verify the design documentation to ensure the system is programmed to prevent transmission on the NASA frequency prior to landing.	Verified	Payload Electronics & Software	**(1) & (2)** The payload software has a hardcoded time-limit that will prevent it from transmitting too early (prior to landing) or too late (after the transmission window). See Section 4.5.2 for current payload software and electronics design. **(3)** The only other transmitting device (the GPS) is not on the 2M band. The utilized frequency has been approved by NASA during the CDR milestone.
4.3.1	Black powder and/or similar energetics are only permitted for deployment of in-flight recovery systems. Energetics will not be permitted for any surface operations.	The Payload Team does not design a jettisoning payload.	The payload design does not jettison.	**Inspection:** Review the payload design documentation to ensure no jettison mechanism is included.	Verified	Payload Team & Safety	The payload remains fully contained inside the Nose Cone. See Section 4.3 for current non-jettisoning payload design.
4.3.2	Teams SHALL abide by all FAA and NAR rules and regulations.	The Safety Team reviews all systems for compliance.	All systems comply with FAA and NAR rules.	**Inspection:** Review the safety documentation and system designs to verify compliance with FAA and NAR rules.	Verified	Safety	The payload remains fully contained inside the Nose Cone. See Section 4.3 for the safety analysis of the current payload design.
4.3.3	Any payload experiment element that is jettisoned during the recovery phase SHALL receive real-time RSO permission prior to initiating the jettison event, unless exempted from the requirement by the RSO or NASA.	The Payload Team does not design a jettisoning payload.	The payload does not jettison.	**Inspection:** Review the payload design documentation to ensure no jettison mechanism is included.	Verified	Payload Systems & Safety	The payload remains fully contained inside the Nose Cone. See Section 4.3 for current non-jettisoning payload design.
4.3.4	Unmanned aircraft system (UAS) payloads, if designed to be deployed during descent, SHALL be tethered to the vehicle with a remotely controlled release mechanism until the RSO has given permission to release the UAS.	The Payload Team does not design a UAS or jettisoning payload.	The payload does not jettison.	**Inspection:** Review the payload design documentation to ensure no jettison mechanism is included.	Verified	Payload Systems & Safety	The payload remains fully contained inside the Nose Cone. See Section 4.3 for current non-jettisoning payload design.
4.3.5	Teams flying UASs SHALL abide by all applicable FAA regulations, including the FAA's Special Rule for Model Aircraft (Public Law 112–95 Section 336; see https://www.faa.gov/uas/faqs).	The Payload Team does not design a UAS or jettisoning payload.	The payload does not jettison.	**Inspection:** Review the payload design documentation to ensure no jettison mechanism is included.	Verified	Safety	The payload remains fully contained inside the Nose Cone. See Section 4.3 for current non-jettisoning payload design.
4.3.6	Any UAS weighing more than .55 lbs. SHALL be registered with the FAA and the registration number marked on the vehicle.	The Payload Team does not design a UAS or jettisoning payload.	The payload does not jettison.	**Inspection:** Review the payload design documentation to ensure no jettison mechanism is included.	Verified	Payload Team	The payload remains fully contained inside the Nose Cone. See Section 4.3 for current non-jettisoning payload design.

Table 8.41: 2024-2025 Safety Requirements

NASA Req No.	Requirement Statement	Planned Action	Verification Success Criteria	Verification Method	Phase	Subsystem Allocation	Verification Results
5.1	Each team shall use a launch and safety checklist.	The Team Lead will create a checklist for launch day activities and include it in the CDR and FRR report.	A detailed launch and safety checklist is created and documented for all Subscale, VDF, PDF, and Huntsville launches.	**Review:** Confirm detailed launch and safety checklists are included in the CDR and FRR reports.	Verified	All Subsystems	See Section 7.2 for the Full-scale Launch Day Checklist.
5.2	Each team shall identify a student safety officer.	The team will nominate a Safety Officer, identified in the proposal document.	A student Safety Officer is nominated and identified in all report documentation.	**Review:** Verify that the Safety Officer's name and responsibilities are included in milestone documents.	Verified	Project Management, Safety	See Section 6.1 in the CDR report for the Safety Officer identification.
5.3.1.1	The Safety Officer SHALL monitor team activities during design.	The Safety Officer or a member of the Safety Team will attend design activities to enforce safety protocols.	Safety Protocols are enforced during all design activities.	**Inspection:** Confirm monitoring through attendance records and safety documentation.	Verified	Project Management, Safety	See Section 6.1 in the CDR report for the Safety Officer and Safety Team responsibilities.
5.3.1.2	The Safety Officer SHALL monitor team activities during construction.	The Safety Officer or a member of the Safety Team will attend construction activities to enforce safety protocols.	Safety Protocols are enforced during all construction activities.	**Inspection:** Confirm monitoring through activity logs and adherence to documented safety protocols.	Verified	Project Management, Safety	See Section 6.1 in the CDR report for the Safety Officer and Safety Team responsibilities.
5.3.1.3	The Safety Officer SHALL monitor team activities during assembly.	The Safety Officer or a member of the Safety Team will enforce safety protocols during all Launch Vehicle assemblies.	Safety protocols are enforced during all assembly activities.	**Inspection:** Confirm monitoring through assembly records and adherence to documented safety protocols.	Verified	Project Management, Safety	See Section 6.1 in the CDR report for the Safety Officer and Safety Team responsibilities.
5.3.1.4	The Safety Officer SHALL monitor team activities during ground testing.	The Safety Officer or a member of the Safety Team will enforce safety protocols during ground testing.	Safety protocols are enforced during all ground testing.	**Inspection:** Confirm monitoring through ground testing records and adherence to documented safety protocols	Verified	Project Management, Safety	See Section 6.1 in the CDR report for the Safety Officer and Safety Team responsibilities.
5.3.1.5	The Safety Officer SHALL monitor team activities during Subscale launch tests.	The Safety Officer or a member of the Safety Team will ensure adherence to safety protocols during Subscale launches.	Safety protocols are enforced during Subscale launches.	**Inspection:** Confirm monitoring through Subscale Launch Day Checklist records	Verified	Project Management, Safety	See Section 7.2 for the Full-scale Launch Day Checklist.
5.3.1.6	The Safety Officer SHALL monitor team activities during Full-scale launch tests.	The Safety Officer or a member of the Safety Team will ensure adherence to safety protocols during Full-scale launches.	Safety protocols are enforced during Full-scale launches.	**Inspection:** Confirm monitoring through Full-scale Launch Day Checklist records and launch attendance records	Verified	Project Management, Safety	See Section 7.2 for the Full-scale Launch Day Checklist.
5.3.1.7	The Safety Officer SHALL monitor team activities during the competition launch.	The Safety Officer or a member of the Safety Team will ensure adherence to safety protocols during the competition launch.	Safety protocols are enforced during the competition launch.	**(1) Inspection:** Confirm monitoring through competition Launch Day Checklist records **(2) Inspection:** Confirm Safety Officer attendance with Huntsville roster	Verified	Project Management, Safety	**(1)**See Section 7.2 for the Full-scale Launch Day Checklist. **(2)** See Huntsville roster.
5.3.1.8	The Safety Officer SHALL monitor team activities during recovery.	The Safety Officer or a member of the Safety Team will enforce safety protocols during recovery activities.	Safety protocols are enforced during all recovery operations.	**Inspection:** Confirm monitoring through outreach attendance records and adherence to documented safety protocols.	Verified	Project Management, Safety	See Section 6.1 in the CDR report for the Safety Officer and Safety Team responsibilities
5.3.1.9	The Safety Officer SHALL monitor team activities during STEM engagement.	The Safety Officer or a member of the Safety Team will ensure adherence to safety protocols during STEM activities.	**(1)** Safety protocols are enforced during STEM engagement activities. **(2)** All participants remain safe and unharmed.	**(1) Inspection:** Safety and mitigation protocols are included in report documentation. **(2) Demonstration:** STEM engagement reports do not include injury notifications.	Verified	Project Management, Safety	**(1)** See Section 7.4 for STEM Engagement FMEA analysis. **(2)** No incidents or injuries have occurred during STEM engagement events.
5.3.2	The Safety Officer SHALL implement team-developed procedures.	The Safety Officer will implement and verify all procedures for construction, assembly, launch, and recovery.	Multiple procedure lists for required team practices are created and distributed to subsystem leads.	**Inspection:** Inspect the team's safety handbook for safety procedures.	Verified	Safety	The team lab space includes folders for each subsystem of safety protocols and procedures.
5.3.3	The Safety Officer SHALL manage team's hazard analyses and procedures.	The Safety Officer will manage and maintain the team's hazard analyses and safety data.	Team hazard analysis and procedures in all report documentation.	**Inspection:** Inspect report documentation for hazard analyses and procedures.	Verified	Safety	See Sections 7.4.1 and 7.5 for subsystem FMEAs and hazard analyses.

Table 8.41: 2024-2025 Safety Requirements

NASA Req. No.	Requirement Statement	Planned Action	Verification Success Criteria	Verification Method	Phase	Subsystem Allocation	Verification Results
5.3.4	The Safety Officer SHALL assist in writing hazard analyses and procedures.	The Safety Officer will assist in creating hazard analyses and procedures for safety.	**(1)** Hazard analyses and procedures are written for each subsystem. **(2)** The Safety Officer reviews each subsystem hazard analysis.	**Inspection:** Inspect report documentation for hazard analyses and procedures.	Verified	Safety	**(1)** See Sections 7.4.1 and 7.5 for subsystem FMEAs and hazard analyses. **(2)** Safety Officer assisted in the creation of the FMEAs and hazard analyses.
5.4	Teams SHALL abide by local rocketry club's RSO rules.	The Safety Officer will verify compliance with local rules.	**(1)** The team is informed of the local rocketry club's RSO rules. **(2)** The team adheres to the RSO rules of the local rocketry club during all phases of the rocket's design, construction, and launch events.	**(1) Review:** Confirm that appropriate information was communicated to all team members. **(2) Demonstration:** Demonstrate compliance with all local RSO rules by successfully launching the final Subscale and Full-scale rocket design. Include successful launch documentation in milestone reports.	Verified	Safety	**(1)** See Appendix 9.4 for the HPRC Safety Handbook. **(2)** See Section 6.2 for attempted Vehicle Demonstration Flight.
5.5	Teams SHALL abide by FAA rules.	The Safety Officer will train the team on safety protocols and ensure compliance with FAA rules.	**(1)** The team is informed of the relative FAA rules and regulations prior to the design process. **(2)** The team follows all FAA rules and regulations during the design, construction, and flight phases.	**(1) Review:** Confirm that appropriate information was communicated to all team members. **(2) Demonstration:** All Subscale, VDF, and PDF flights are flown and follow FAA rules.	Verified	All Subsystems	**(1)** See Appendix 9.4 for the HPRC Safety Handbook. **(2)** See Section 6.2 for attempted Vehicle Demonstration Flight.

8.3.2 Team Derived Requirements

Table 8.42: 2024-2025 Team-Derived Structures Requirements

Req No.	Requirement Statement	Justification	Verification Success Criteria	Verification Method	Phase	Subsystem Allocation	Verification Results
Functional Requirements							
LVF.1	When performing cuts or drilling holes into a fiberglass tube, pilot holes SHALL be drilled before making the final hole. Additionally, blue masking tape SHALL be applied to the underside of the fiberglass tube at the location of the future hole.	Physical stress to the fiberglass during cutting or drilling procedures increases the risk of delamination and splintering in the material. Drilling a pilot hole reduces stress in the concentrated region and blue tape reinforces the outermost layer of the material. These procedures reduce the risk of damaging the material on the opposite end that the drilling is occurring. The full-scale launch vehicle will be composed of primarily fiberglass. This requirement must be followed when drilling the shear pin holes, pressure port holes, rivet holes, and switchband holes.	**(1)** Pilot holes are drilled before final holes for all required tasks. **(2)** Blue masking tape is applied properly before drilling.	**(1) Inspection:** Inspect the fiberglass tubes to verify the presence of pilot holes. **(2) Inspection:** Inspect the application of blue masking tape before the final hole.	Verified	Structures	Full-scale was manufactured using this technique. See Section 3.5 for vehicle manufacturing details.
LVF.2	Prior to the launch day of any version of the NASA SL competition rocket, the NC State HPRC team members SHALL perform a "dry run" of launch day assembly. Dry run includes the set-up and installation of all parts of the rocket, except motor install and black powder charges.	A dry run is required before launch day to verify that the launch vehicle and payload integrate correctly, without requiring extra materials on the day of launch. This is crucial because the nearest launch site is at least two hours away, and any missing components would prevent the launch from proceeding. Thus resulting in failed milestones.	All rocket components (excluding motor and black powder) are assembled and integrated successfully during the dry run.	**Demonstration:** Observe the team conducting the full "dry run" assembly, ensuring all parts integrate correctly without requiring extra materials.	Verified	Structures, Team Management	Full-scale dry run was performed on 2/21/2025 and 3/7/25. See Section 8.1.14 for Full-Scale Dry Run Verification Test details.

Table 8.42: 2024-2025 Team-Derived Structures Requirements

Req. No.	Requirement Statement	Justification	Verification Success Criteria	Verification Method	Phase	Subsystem Allocation	Verification Results
LVF.3	The team members of the NC State HPRC, SHALL perform test fitting procedures during every main construction phase of any version of a NASA SL competition rocket. Test fitting procedures are necessary for any semi or fully built assembly of the launch vehicle.	Test fitting is necessary to verify that all components of the launch vehicle are sized and spaced correctly. This ensures that new materials do not need to be purchased and component tolerancing is correct. Additionally, the team has a fixed budget and cannot purchase unnecessary or repetitive materials frequently.	**(1)** Components are verified to fit correctly during every construction phase. **(2)** No additional materials are required due to fitment errors.	**(1) Demonstration:** Observe test fittings during each construction phase to confirm all components fit and align as required. **(2) Inspection:** Inspect the fit and tolerances after test fitting procedures are completed.	Verified	Integration, Structures	Full-scale components were integrated successfully. See Section 3.5 for the LV manufacturing process.
LVF.4	Anytime West Systems epoxy is used on any version of the NASA SL competition rocket, the particular area SHALL undergo a curing process of 24 hours.	West Systems epoxy requires 24 hours to fully cure. This ensures the epoxy achieves its full strength.	Epoxy areas are undisturbed for 24 hours.	**Inspection:** Inspect the epoxy areas to ensure they remain undisturbed during the curing period.	Verified	Structures	Epoxied components are left in a corner of the lab with a note detailing start and end date and time.
LVF.5	When performing cuts into the circular tubing of any version of the NASA SL competition launch vehicle, a jig SHALL be used to make sure the object does not roll.	Due to budgeting of materials, correct measurements and accurate cuts are required for the body tube of the rocket. A jig or clamp allows for the material to be steady during manipulation and result in clean and precise cuts. The dimensions of the rocket are fixed to allow adequate spacing for the challenge payload, experimental payload, and recovery systems.	**(1)** Jigs are used for all cuts into circular tubing. **(2)** Tubes remain steady during cutting procedures.	**(1) Demonstration:** Demonstrate the use of a jig during cutting to ensure tubing does not roll. **(2) Inspection:** Inspect the final vehicle assembly and verify straight edges.	Verified	Structures	All fiberglass cuts on the full-scale LV are straight and aligned. Jigs were used during the cutting process of the circular body tube. See Section 3.5 for the LV manufacturing process.
LVF.6	When using a drill press, the relevant team member SHALL ensure that the part is properly clamped down to prevent misalignment and shifting during the drilling process.	Securing materials with clamps while using the drill press ensures that the component does not shift under the drill bit force, preventing hole misalignment that could necessitate component replacement.	**(1)** All parts are secured using clamps during drilling. **(2)** Holes are aligned as intended without shifting.	**(1) Inspection:** Inspect the clamping setup on the drill press. **(2) Inspection:** Inspect the final vehicle assembly for properly aligned holes.	Verified	Structures	Full-scale components were integrated successfully. See Section 3.5 for the LV manufacturing process and assembled photos.
LVF.7	Prior to the cutting of any body tube of any version of the NASA SL competition rocket, the Integration Lead (or Team Lead) and the Structures Lead SHALL approve the measurement individually.	Implementing a two-factor verification process minimizes the risk of making incorrect measurements for materials with limited availability.	Measurements are signed off by both the Integration Lead and Structures Lead prior to cutting.	**Inspection:** Inspect the Launch Vehicle for proper measurements.	Verified	Integration, Structures	Integration Lead and the Structures Lead approved all cutting-related measurements. See Section 3.5 for the assembled LV components and manufacturing proof.
LVF.8	All ballast installed in the NASA SL competition launch vehicle SHALL be removable.	The payload mass may change after vehicle dimensions are defined. This may result in changes in stability margin of the launch vehicle beyond the margins defined in Requirement LVD.10. To maintain the desired stability margin throughout the project, removable ballast is required to adjust the rocket's stability margin as needed.	**(1)** Ballast can be removed without damaging the rocket. **(2)** Adjustments to stability margins are possible using the removable ballast.	**Inspection:** Inspect the installation of ballast to verify removability and adjustability.	Verified	Structures	See Section 3.5.3 for the final ballast system in the full-scale Launch Vehicle.
LVF.9	Fasteners attached to the RMFS SHALL only be tightened by hand or by screwdriver. No torque or torque multiplying devices SHALL be used.	Over tightening the 8-32 fasteners into the 6061-T6 aluminum and wood RMFS would result in stripping of the threads in the RMFS. This would result in loss of the RMFS centering ring. Component replacement is an expense beyond the budget outlined in Section 8.4.	**(1)** Fasteners are tightened using hand tools only. **(2)** RMFS threads remain undamaged after fastening.	**(1) Demonstration:** Demonstrate fastening using only hand tools. **(2) Inspection:** Inspect the fasteners and threads to ensure no torque or torque-multiplying devices were used.	Verified	Structures	The Full-Scale launch day assembly checklists verifies this requirement. See Steps 3.6 and 3.7 in Section 7.2 for the Full-Scale Launch Day Checklist.

Table 8.42: 2024-2025 Team-Derived Structures Requirements

Req. No.	Requirement Statement	Justification	Verification Success Criteria	Verification Method	Phase	Subsystem Allocation	Verification Results
LVF.10	The apogee of the full-scale NASA SL competition launch vehicle SHALL be determined and verified by at least three separate analysis programs.	Using three different analysis programs allows the team to cross-analyze results and reduces the likelihood of systematic errors. Additionally, these programs provide advanced initial conditions that can capture a wider range of performance scenarios. This expanded data pool enhances the team's ability to accurately predict the apogee, as required by NASA Requirement 2.1, and optimize altitude points. Furthermore, the results from the analysis programs, as detailed in Section 3.7.3, also support the performance and coding software for the Air Brakes payload discussed in Section 6.1.6.	**(1)** Apogee results from three programs agree within acceptable margins. **(2)** Discrepancies between results are documented and justified.	**(1) Analysis:** Compare results from three separate analysis programs to verify consistency and accuracy. **(2) Review:** Review the results to ensure they meet NASA Requirement 2.1.	Verified	Aerodynamics	**(1) & (2)** Simulations were performed using OpenRocket, RocketPy, and RASAero II. See Section 3.7.3 for current rocket analysis in 3 separate programs.
LVF.11	Rivets SHALL sustain a maximum tensile load greater than 80 lbf and have a factor of safety greater than 2.	The rivets must be stronger than the shear pins by a factor of 2 to ensure non-separating sections don't separate during the ejection of black powder charges.	Rivets break after a tensile load of 80 lbf.	**Test:** Perform a tensile load test that determines the strength of the purchased and utilized rivets.	Verified	Structures	See Section 8.1.7 for the results of the Rivet Shear Loading Test. The first rivet failed at a load of 194 lbf. This results in a factor of safety of 2.4.
LVF.12	Shear pins SHALL sustain a maximum tensile load of 40 +/- 5 lbf.	This rating ensures the designated sections separate during the ejection of black powder charges.	The shear pins break at 40 +/- 5 lbf.	**Test:** Perform a tensile load test that determines the strength of the purchased and utilized shear pins.	Verified	Structures	See Section 8.1.8 for the results of the Shear Pin Shear Loading Test. The first shear pin failed at a load of 45 lbf, the second at 37 lbf, and the third at 38 lbf. All shear pins failed within the expected ultimate loading of 40±5 lbf.
Design Requirements							
LVD.1	All structural components SHALL have a safety factor of 1.5 times greater than the maximum sustained load, demonstrated by both simulations and experiments.	A safety factor of 1.5 times greater that the expected load provides a good balance between safety and performance. A safety factor of 1.5 was chosen due to its frequent use in the engineering field. Additionally, verifying simulations with experimental and empirical data improves the integrity and reliability of the simulations. Overall, the 1.5 factor provides a buffer against unforeseen stresses and design uncertainties. Early identification of potential issues allows for the necessary modifications, enhancing safety and contributing to overall mission success.	**(1)** Simulations (Ansys, etc.) are performed on the RFMS, bulkheads, body tube, and fins and result in a factor of safety greater than 1.5. **(2)** Experimental tests are perfomed on structural systems (if able) and result in a factor of safety 1.5 or greater.	**(1) Analysis:** Perform Ansys/CAD simulations and numerical calculations. **(2) Test:** Conduct structural testing to validate the analysis results and safety factor compliance.	Verified	Structures	**(1)** Extensive FEA analysis was performed in the CDR documentation for the RFMS, bulkheads, fins, and body tube cut-outs. See Section 3.2.13 in the CDR documentation for all structural FEA results. **(2)** The LV Testing Suite (Section 8.1) consists of successful structure-related experiments. All experiments resulted in a factor of safety of 1.5.

Table 8.42: 2024-2025 Team-Derived Structures Requirements

Req. No.	Requirement Statement	Justification	Verification Success Criteria	Verification Method	Phase	Subsystem Allocation	Verification Results
LVD.2	All materials used for the tubing of a NASA SL competition rocket SHALL be from a reputable supplier in hobby rocketry.	This requirement is necessary to ensure that all tubing materials meet established safety, quality, and performance standards. This also ensures that there are no inconsistencies in the tubing that may increase the risk of material failure during flight.	Tubing material is purchased from a reputable supplier.	**Review:** Review supplier for rocket tubing.	Verified	Structures	The supplier for Full-Scale tubing is Wildman Rocketry and the supplier for Subscale tubing is Always Ready Rocketry. See Table 8.46 for the material vendor list.
LVD.3	The subscale version of the NASA SL competition rocket SHALL be constructed using Blue Tube.	Due to budget constraints outlined in Section 8.4, blue tube is the most cost effective material for subscale launch vehicle body tube.	Blue Tube material is used for all subscale body tubes.	**(1) Inspection:** Inspect the subscale rocket to verify the use of Blue Tube material. **(2) Review:** Review purchase records and documentation to confirm compliance.	Verified	Structures	The supplier for Subscale tubing is Always Ready Rocketry (ARR). See Table 8.46 for the material vendor list.
LVD.4	The full-scale version of the NASA SL competition rocket SHALL be constructed using fiberglass tubing.	Fiberglass is used as the full-scale rocket material due to its longevity and material strength. Additionally, the payload challenge and recovery system requires that the material be RF transparent. Thus, we used fiberglass instead of carbon fiber for the launch vehicle body.	Fiberglass tubing is used for all full-scale body tubes.	**(1) Inspection:** Inspect the full-scale rocket to verify the use of fiberglass tubing. **(2) Review:** Review material selection and verify compliance with design requirements.	Verified	Structures	The supplier for the Full-Scale tubing is Wildman Rocketry. See Table 8.46 for the material vendor list.
LVD.5	The subscale and full-scale Nose Cone material SHALL be RF transparent.	The payload challenge requires the use of a radio antenna to transmit data to a NASA transceiver. Due to the estimated length of the antenna, the payload needs to be in the Nose Cone of the rocket. Thus, the Nose Cone needs to be made of radio-transparent material to not hinder RF transmissions.	Nose cone is made of fiberglass or another RF transparent material.	**Inspection:** Inspect the Nose Cone for compliance with structural and material requirements.	Verified	Structures	The Nose Cone is made of fiberglass (a confirmed RF transparent material). See Section 3.5.3 for the manufacturing details and Table 8.46 for the material vendor list.
LVD.6	The launch vehicle design for any version of the NASA SL competition rocket SHALL have four identical fins, evenly spaced around the rocket tube.	Four identical and evenly spaced fins provides aerodynamic stability, redundancy in error, and helps distribute the aerodynamic forces equally. This allows the rocket to clear the launch rail evenly and cleanly. Air Brakes, Section 6.1.6, uses these aerodynamic forces to predict relative and future apogee.	**(1)** Four fins are installed and identical in dimensions. **(2)** Fins are evenly spaced at 90° intervals around the rocket tube.	**Inspection:** Inspect the rocket to verify four identical fins are installed and evenly spaced.	Verified	Structures	There are four identical and even spaced fins. See Section 3.5.7 for the manufactured Fin Can design and RMFS.
LVD.7	The launch vehicle design for any version of the NASA SL competition rocket SHALL have the center of gravity forward of the center of pressure.	Handbook Requirement 2.14 states that the launch vehicle must have a static stability margin of 2.0 at rail exit. Due to static stability margin being greater than 2, the center of gravity of the launch vehicle must be forward of the center of pressure to ensure a positive static stability margin.	**(1)** Static stability margin at rail exit is calculated as 2.0 or greater. **(2)** Center of gravity is forward of the center of pressure.	**(1) Analysis:** Use simulation software to calculate and verify the center of gravity and center of pressure locations. **(2) Review:** Review simulation results to ensure the static stability margin meets requirements.	Verified	Aerodynamics	The static stability margin for the as-built Full-Scale design is 2.0 with 0.46 lbs of ballast in the Nose Cone. See Section 3.7.4 for the static stability margin calculations.

Table 8.42: 2024-2025 Team-Derived Structures Requirements

Req. No.	Requirement Statement	Justification	Verification Success Criteria	Verification Method	Phase	Subsystem Allocation	Verification Results
LVD.8	The full-scale version of the NASA SL competition rocket SHALL include a 6061 Aluminum thrust plate between the motor retainer and the airframe body.	A 6061 Aluminum thrust plate is necessary to distribute the motor's thrust evenly across the rocket's airframe, preventing localized stress that could damage the launch vehicle components, including the RMFS to which the thrust plate is attached. This ensures structural integrity during launch, minimizing the risk of failure and enhancing the rocket's reliability under high loads.	**(1)** The thrust plate is constructed from 6061 Aluminum. **(2)** The thrust plate evenly distributes thrust across the airframe body.	**(1) Inspection:** Inspect the material and placement of the thrust plate. **(2) Analysis:** Perform simulation testing to validate even distribution of force.	Verified	Structures	**(1)** The thrust plate is made of 6061 aluminum and is located at the aft end of the motor. See Section 3.3.8 for thrust plate location. **(2)** FEA simulations were performed on the thrust plate in CDR and PDR documentation. The max value sustained was 1449.5 psi, resulting in a factor of safety of 11.39.
LVD.9	The NASA SL competition rocket SHALL utilize at least two centering rings to support the motor casing.	Two centering rings are necessary to ensure that the motor casing is straight and centered in the launch vehicle, which aligns the thrust of the motor with the center of gravity of the launch vehicle. This prevents instability and ensures the accuracy of the mission performance predictions in Section 3.7.	**(1)** At least two centering rings are installed and secure the motor casing. **(2)** Centering rings maintain alignment of the motor casing with the center of gravity.	**(1) Inspection:** Inspect the installation of centering rings to verify quantity and placement. **(2) Demonstration:** Observe motor installation to confirm alignment and structural support.	Verified	Structures	**(1) & (2)** The motor casing is integrated with the RFMS system. The system contains two centering rings for motor casing alignment. See Figure 3.26 for the manufactured RMFS with two centering rings.
LVD.10	The full-scale NASA SL competition rocket SHALL have a stability margin between 2.0 and 2.9 at rail exit.	Handbook Requirement 2.14 states that the launch vehicle must have a minimum stability margin of 2.0. A maximum stability margin of 2.9 reduces the likelihood of undesired weather cocking which would decrease the accuracy of the mission performance predictions in Section 3.7.	Stability margin at rail exit is calculated between 2.0 and 2.9.	**Analysis:** Use simulation software to calculate stability margins at rail exit.	Verified	Aerodynamics	The static stability margin for the as-built Full-Scale design is 2.0 with 0.46 lbs of ballast in the Nose Cone. See Section 3.7.4 for the static stability margin calculations.
LVD.11	The subscale and full-scale NASA SL competition rocket SHALL have a maximum velocity at or below Mach 0.75.	At Mach 0.75 the launch vehicle may start to experience transonic effects, which typically begin to occur around Mach 0.8. These effects, such as increased aerodynamic drag, shock wave formation, and instability, could compromise the rocket's structural integrity and apogee prediction. Thus decreasing accuracy of the predicted mission performance predictions in Section 3.7.	Maximum velocity is calculated to remain below Mach 0.75.	**Analysis:** Simulate the rocket's trajectory to verify the maximum velocity remains below Mach 0.75.	Verified	Aerodynamics	The maximum velocity in simulations for the Full-scale LV is 609.6 fps or 0.54 mach. See Section 3.7.3 for the velocity flight analysis.
LVD.12	All materials used for any version of the NASA SL competition launch vehicle SHALL have known properties and reactions.	To accurately perform stress and strain analysis in online software, the material properties must be known to set accurate initial conditions. These software simulations allow for the launch vehicle structure to be analyzed and for Requirement LVD.1 to be met.	Materials are purchased from a reputable supplier.	**Review:** Review supplier for rocket materials.	Verified	Structures	See Table 8.46 for the material vendor list.

Table 8.42: 2024-2025 Team-Derived Structures Requirements

Req. No.	Requirement Statement	Justification	Verification Success Criteria	Verification Method	Phase	Subsystem Allocation	Verification Results
Safety Requirements							
LVS.1	Any club member who wishes to participate in the construction of any part of a NASA SL rocket or club rocket SHALL score a 100% on a lab safety quiz created by the Safety Officer. No member SHALL be allowed to interact with any tool in the NC State HPRC lab prior to taking the safety quiz. Previous year members SHALL not be exempt from the rules established above.	Understanding the safety procedures and proper PPE for each lab tool decreases the number of lab related incidents. Additionally, it establishes early expectations on lab procedures and reinforces the importance of safety education. The safety quiz requirement makes sure that all team members are fully aware of current safety standards and practices.	**(1)** All participating members complete the safety quiz and score 100%. **(2)** No tools are accessed by any member prior to quiz completion. **(3)** Records are maintained for all quiz completions.	**(1) Demonstration:** Observe quiz administration and ensure members score 100%. **(2) Inspection:** Check lab records to confirm no unauthorized tool usage. **(3) Review:** Verify compliance through Safety Officer documentation.	Verified	Safety Team, Structures	All team members have agreed to the rules and safety regulations established in the Safety Quiz (Appendix 9.4) and the HPRC Safety Handbook (Appendix 9.4) per the Safety Contract (Appendix 9.3.1).
LVS.2	During all phases of construction of the launch vehicle or payload, the elected safety officer or a member of the safety team SHALL be present to enforce safety procedures and proper PPE. Every member participating or in the proximity of tool use SHALL wear the proper PPE associated with the task.	Proper PPE protects team members from the potential hazard that they are working with or working around. Establishing this as a safety rule decreases the hazard risk of associated lab-related tasks. A comprehensive list of potential lab hazards can be found in Section 7.4.	**(1)** A safety officer or safety team member is always present during construction phases. **(2)** All members near tool use wear proper PPE. **(3)** PPE compliance aligns with Section 7.4 hazards.	**(1) Inspection:** Perform spot checks during construction phases to verify the presence of safety personnel. **(2) Test:** Observe team members for proper PPE usage. **(3) Review:** Review safety logs and PPE compliance records.	Verified	Safety Team	All competition-related construction is finished. All team members have agreed to the rules and safety regulations established in the Safety Quiz (Appendix 9.4) and the HPRC Safety Handbook (Appendix 9.4) per the Safety Contract (Appendix 9.3.1).
LVS.3	When interacting with the NC State HPRC lab drill press, no gloves, rings, or bracelets SHALL be worn.	Wearing gloves increases the risk of entanglement in the machine and the risk of injury. More information can be found in Table 7.4.	No gloves, rings, or bracelets are worn by any member while operating the drill press.	**Demonstration:** Monitor drill press operations to ensure compliance.	Verified	Safety Team	All team members have agreed to the rules and safety regulations established in the Safety Quiz (Appendix 9.4) and the HPRC Safety Handbook (Appendix 9.4) per the Safety Contract (Appendix 9.3.1).
LVS.4	When interacting with the NC State HPRC lab drill press, all hair and loose clothing SHALL be tied back.	Loose hair and clothing can get entangled with the machinery and result in personal harm or the incorrect drilling of a limited stock launch vehicle item. Reducing the risk of harm and distractions, reduces the risk of drilling mistakes. More information on the safety hazard can be found in Section 7.4.	All members tie back hair and loose clothing before operating the drill press.	**Demonstration:** Observe team members preparing to use the drill press.	Verified	Safety Team	All members comply with drill press safety protocols. They have agreed to the rules and safety regulations established in the Safety Quiz (Appendix 9.4) and the HPRC Safety Handbook (Appendix 9.4) per the Safety Contract (Appendix 9.3.1).

Table 8.42: 2024-2025 Team-Derived Structures Requirements

Req. No.	Requirement Statement	Justification	Verification Success Criteria	Verification Method	Phase	Subsystem Allocation	Verification Results
LVS.5	When interacting with the NC State HPRC lab drill press, the drilling area and the area surrounding the drill press SHALL be clear of all potential hazards. Such hazards include, but are not limited to, hanging objects, active machinery that can interfere with the operation of the drill press, or articles of clothing from surrounding team members.	See Requirement LVS.3 and Requirement LVS.4 in Section 8.3.2 for team derived launch vehicle requirements.	**(1)** The drill press area is free of all hazards prior to and during operation. **(2)** No obstructions or unsafe objects are present in the vicinity of the drill press.	**Inspection:** Inspect the drill press area before operations.	Verified	Safety Team	**(1)** The drill press is inspected for hazards prior to operation. **(2)** All team members have agreed to the rules and safety regulations established in the Safety Quiz (Appendix 9.4) and the HPRC Safety Handbook (Appendix 9.4) per the Safety Contract (Appendix 9.3.1).
LVS.6	When interacting with the NC State HPRC lab drill press, safety glasses SHALL be worn at all times.	When drilling through materials on a drill press, the drilled material creates flying debris. These chips or particles can impact a team member's vision, leading to personal harm or mistakes in launch vehicle material. Safety glasses decreases the risk of these issues.	**(1)** All members operating the drill press wear safety glasses. **(2)** No incidents related to flying debris occur.	**(1) Demonstration:** Observe members during drill press operations to confirm safety glasses usage. **(2) Review:** Verify incident reports and logs for proper protocol adherence.	Verified	Safety Team	**(1) & (2)** All members comply with drill press safety protocols and PPE. No incidents have been reported. **(3)** All team members have agreed to the rules and safety regulations established in the Safety Quiz (Appendix 9.4) and the HPRC Safety Handbook (Appendix 9.4) per the Safety Contract (Appendix 9.3.1).
LVS.7	During any use of epoxy while in the NC State HPRC lab, team members SHALL wear gloves to limit epoxy exposure to the skin. If epoxy is contacted to the skin, the team member SHALL immediately follow safety protocols and inform the elected Safety Officer or a member of the Safety Team.	Following safety protocol immediately decreases the time-related cost caused by the incident on the project timeline found in Section 8.5. Ensuring that team-members have a reduced risk to a common construction hazard ensures the safety of the personnel and the efficiency of the project.	**(1)** Gloves are worn during all epoxy use. **(2)** Safety protocols are followed in the event of epoxy skin contact.	**(1) Inspection:** Observe members during epoxy use for proper PPE compliance. **(2) Review:** Verify incident reports and logs for proper protocol adherence.	Verified	Safety Team	**(1) & (2)** All members comply with the epoxy PPE guidelines and no epoxy-related incidents have occurred. **(3)** All team members have agreed to the rules and safety regulations established in the Safety Quiz (Appendix 9.4) and the HPRC Safety Handbook (Appendix 9.4) per the Safety Contract (Appendix 9.3.1).

Table 8.42: 2024-2025 Team-Derived Structures Requirements

Req. No.	Requirement Statement	Justification	Verification Success Criteria	Verification Method	Phase	Subsystem Allocation	Verification Results
LVS.8	During the drilling, sanding, or cutting of fiberglass components, all team members in the vicinity of the operating tool SHALL wear a particle mask and other appropriate PPE for the tool in use. These actions SHALL occur outdoors or in a well ventilated area. Additionally, one team member SHALL be responsible for holding the lab vacuum during fiberglass cutting or manipulation.	As defined in Requirement LVD.4, fiberglass will be the main component of the full-scale rocket. Thus, an established safety procedure is needed during any manipulation of the material. Fiberglass inhalation can irritate the respiratory system and the tiny fibers can become lodged in the lung tissue. This can impact personnel availability and reduce the number of educated individuals working on the project.	**(1)** All team members wear particle masks and proper PPE during fiberglass manipulation. **(2)** Operations take place outdoors or in ventilated areas. **(3)** A lab vacuum is utilized during fiberglass cutting.	**(1) Demonstration:** Monitor fiberglass manipulation sessions to confirm PPE compliance. **(2) Inspection:** Ensure operations occur in ventilated environments. **(3) Review:** Verify vacuum usage through observation.	Verified	Safety Team	**(1), (2), & (3)** All fiberglass manipulation is done with the proper ventilation and PPE. **(4)** All competition-related construction is finished. See Appendix 9.4 for the Safety Quiz and Appendix 9.4 for the HPRC Safety Handbook.
LVS.9	During any use of Colloidal Silica Epoxy Filler while in the NC State HPRC lab, team members SHALL wear gloves, a particle mask, and safety glasses. Additionally, all team members in the vicinity of the Colloidal Silica Filler SHALL wear a particle mask.	The construction process of the launch vehicle requires precision and attention to detail; any accidental exposure or injury can disrupt workflow and delay project timelines. Thus, maintaining a safe environment encourages productivity and allows the team to work efficiently.	**(1)** All members wear gloves, particle masks, and safety glasses during filler use. **(2)** Team members in the vicinity wear particle masks. **(3)** No exposure-related incidents occur.	**(1) & (2) Inspection:** Observe filler application sessions to verify PPE compliance. **(3) Review:** Check incident logs for compliance and effectiveness of safety protocols.	Verified	Safety Team	**(1), (2), & (3)** All uses of the Colloidal Silica Epoxy Filler has been used with the appropriate PPE and no exposure-related incidents have occurred. **(4)** All team members have agreed to the rules and safety regulations established in the Safety Quiz (Appendix 9.4) and the HPRC Safety Handbook (Appendix 9.4) per the Safety Contract (Appendix 9.3.1).
LVS.10	During any use of spray paint, HPRC members SHALL wear gloves and a mask. There SHALL not be any use of spray paint in non-ventilated areas.	Ensuring proper respiratory and ventilation protocols are followed, minimizes the risk of health-related incidents that could halt progress. Delays due to accidents or illnesses can lead to missed deadlines and increased costs, impacting the overall project timeline. Proper ventilation and PPE ensures that the painting process can proceed without interruptions.	**(1)** All members wear gloves and masks during spray painting. **(2)** Spray painting occurs only in ventilated areas. **(3)** No respiratory incidents are reported.	**(1) Demonstration:** Monitor spray painting sessions for proper PPE compliance. **(2) Inspection:** Verify painting occurs in ventilated spaces. **(3) Review:** Check incident logs for compliance and effectiveness of safety protocols.	Verified	Safety Team	**(1) & (2)** All spray paint activities occur outdoors or in a paint booth. All members have/will wear the proper PPE. **(3)** No respiratory incidents have occurred. **(4)** All team members have agreed to the rules and safety regulations established in the Safety Quiz (Appendix 9.4) and the HPRC Safety Handbook (Appendix 9.4) per the Safety Contract (Appendix 9.3.1).

Table 8.42: 2024-2025 Team-Derived Structures Requirements

Req. No.	Requirement Statement	Justification	Verification Success Criteria	Verification Method	Phase	Subsystem Allocation	Verification Results
LVS.11	All motor construction SHALL occur under the supervision of the Team Mentor or an individual with at least an L2 certification.	Motor assembly is extremely important for the success of a rocket launch. An incorrectly assembled motor could lead to a CATO of the rocket, which could result in personnel injuries and mission objective failure.	An L2 (or higher) certification holder or the Team Mentor is present during motor assembly either on or before Launch Day.	**Inspection:** Verify that motor assembly occurs under the supervision of valid personnel. Include the name of the supervisor in checklist documentation.	Verified	Safety Team	The motor was assembled under the supervision of an L2 certified club member.
Environment Requirements							
LVE.1	Left over epoxy SHALL be poured into a communal epoxy waste container and allowed to cure for 24 hours prior to disposal.	Pouring epoxy down the drain can damage a facilities piping and can harm aquatic ecosystems if it makes its way into the water system. Additionally, uncured epoxy can contaminate soil and produce compounds that irritate the respiratory system. Allowing for the epoxy to cure before disposal reduces the hazards that are associated with uncured epoxy in the environment. More environmental concerns for improper epoxy management can be found in Section 7.5.6.	**(1)** All leftover epoxy is disposed of in the communal waste container. **(2)** Epoxy in the waste container cures for 24 hours before being discarded. **(3)** No epoxy is improperly disposed of in sinks or other unauthorized areas.	**(1) Inspection:** Regularly check the epoxy waste container to ensure proper usage. **(2) Inspection:** Check epoxy prior to disposal. **(3) Demonstration:** Observe epoxy disposal practices during lab sessions.	Verified	Safety Team, Structures	**(1) & (2)** Epoxy waste is properly stored and disposed of. **(3)** All club members have agreed to follow the Wake County Waste Disposal Guidelines and signed the safety contract (Appendix 9.4).
LVE.2	All fiberglass shards and dust SHALL be vacuumed by the laboratories shop-vac.	Using a shop-vac captures fine particles and prevents airborne fiberglass from being inhaled. This practice minimizes the chance of contamination in the workspace and promotes responsible handling of materials, ensuring compliance with safety protocols found in Section 7. Regular vacuuming also helps maintain equipment functionality and prolongs the lifespan of the lab's tools and workspace.	**(1)** Fiberglass shards and dust are captured using the shop-vac after any cutting, sanding, or drilling. **(2)** No residual fiberglass debris is found in the workspace. **(3)** The shop-vac is maintained and functional.	**(1) Demonstration:** Observe fiberglass cleanup procedures to confirm shop-vac usage. **(2) Inspection:** Perform post-task checks to ensure the workspace is free of fiberglass debris. **(3) Inspection:** Verify that the shop vac works prior to usage.	Verified	Safety Team	**(1)** The shop-vac is used during all fiberglass cutting and cleanup. **(2) & (3)** All club members have agreed to follow the Wake County Waste Disposal Guidelines and signed the safety contract (Appendix 9.4).

Table 8.43: 2024-2025 Team-Derived Recovery Requirements

Req No.	Requirement Statement	Justification	Verification Success Criteria	Verification Method	Phase	Subsystem Allocation	Verification Results
Functional Requirements							
RF.1	Prior to AV Bay assembly all wire connection points SHALL be visually inspected for frayed, bent, or loose wires.	Damaged wires pose the risk that the avionics and recovery systems won't function and record data properly. This could result in the black powder charges not being ignited and the total failure of a flight objective. Thus, wires must be visually inspected prior to assembling and integrating the AV Bay into the launch vehicle.	Team members inspect AV Bay wires during launch day assembly.	**Inspection:** Inspect the Launch Day Checklist for the instruction of this visual inspection.	Verified	Recovery	The Full-scale launch day checklist verifies wire connections multiple times prior to full integration. See Section 7.2 for the Full-scale launch day checklist.
RF.2	Prior to AV Bay assembly, all wire connection points SHALL be tactilely inspected by "tugging". This involves applying a light tensile force to the wired connection using 2 fingers to verify that the wires don't come loose.	Similarly to Requirement RF.1, tugging on wires verifies the proper AV Bay electronic connections. It also ensures that wire connections will not come loose due to in-flight forces. These connections are responsible for the altimeter, ejection charges, and GPS connections. Failure with a wire coming loose may result in total mission failure.	Team members "tug" AV Bay wires during launch day assembly and wires do not come loose.	Inspection: Inspect the Launch Day Checklist for the instruction of this tactile inspection.	Verified	Recovery	The Full-scale launch day checklist verifies wire connections multiple times prior to full integration. See Section 9.1.2 for the Full-scale launch day checklist (Steps 1.12, 1.28, 1.34, 1.49, 1.51, 3.9, 4.9, 4.21, 6.12).

Table 8.43: 2024-2025 Team-Derived Recovery Requirements

Req. No.	Requirement Statement	Justification	Verification Success Criteria	Verification Method	Phase	Subsystem Allocation	Verification Results
RF.3	Each cell of the LiPo SHALL be charged to above 4.0 V per cell.	The maximum charge for a LiPo cell is 4.2V. Charging the cells to 4.0V ensures that we are not exceeding the maximum value, but still ensuring maximum capacity of operation. This practice could help improve efficiency in applications requiring a high power output and successfully completing NASA Requirement 2.6.	Battery life is checked during Launch Day Checklist and is confirmed to be above 4.0 V per cell.	**Inspection:** Inspect the Launch Day Checklist for the confirmation of battery life.	Verified	Recovery	The Full-scale launch day checklist verifies battery voltage prior to integration. See Section 9.1.2 for the Full-scale launch day checklist (Step 1.13, 1.17, 1.57).
RF.4	Each cell of the LiPo SHALL not be charged to more than 0.03V above the recommended 4.1V per cell	LiPo cells can be overcharged and lead to malfunctions and failure of the equipment. It poses a safety hazard as an overcharged LiPos cell can potentially explode and cause a fire. LiPo safety can be found in the HPRC Safety Handbook (Appendix 9.4).	Battery life is checked during Launch Day Checklist and is confirmed to not be 0.03V above 4.1V.	**Inspection:** Inspect the Launch Day Checklist for the confirmation of battery life.	Verified	Recovery	The Full-scale launch day checklist verifies battery voltage prior to integration. See Section 9.1.2 for the Full-scale launch day checklist (Step 1.13, 1.17, 1.57).
RF.5	All utilized batteries SHALL be tested at least once before each individual launch.	Verifying equipment performance and structure prior to every launch reduces the associated risks of the component during flight. Testing the LiPos prior to each launch event ensures that the LiPos are working properly and are producing an adequate voltage amount needed by its connected avionics. Failure could result in changes in the timeline or data collection failure.	LiPo's are tested prior to launch day.	**Inspection:** Verify that LiPo testing is included in the recovery timeline prior to all launches.	Verified	Recovery	All utilized LiPos were tested prior to the VDF launch. Testing occurred on 2/26/2025.
RF.6	All 9V alkaline batteries SHALL be above 9.00 V.	Fully charged batteries are responsible for multiple electronics in the AV Bay. These batteries must be fully charged because a low voltage results in a lack of current draw in the batteries. Additionally, verifying that all batteries are fully charged help the team meet NASA Requirement 2.6 and Requirement RD.3.	Voltage output of all utilized batteries are above 9V.	**Inspection:** Confirm battery voltage prior to use and instruction is included in Launch Day Checklists.	Verified	Recovery	The Full-scale launch day checklist verifies battery voltage prior to integration. See Section 9.1.2 for the Full-scale launch day checklist (Step 1.3, 1.9).
RF.7	All batteries in the launch vehicle SHALL be removed during cleaning of the launch vehicle directly after the completion of field recovery.	Prompt removal of batteries from the launch vehicle minimizes the risk of battery-related incidents, such as overheating and leakage. Additionally, it allows for the safe handling and recharging of the batteries. This would allow the team to have the ability to relaunch the rocket and all of its components again in the same day as required by NASA Requirement 2.3.	All batteries are removed from the Launch Vehicle after the rocket is successfully recovered.	**Inspection:** Inspect the Launch Day Checklist for the confirmation of battery removal.	Verified	Recovery	All batteries are removed from the LV after recovery, prior to leaving the launch field. See Appendix 9.1.2 for the Full-scale Post Launch Checklist.

Table 8.43: 2024-2025 Team-Derived Recovery Requirements

Req. No.	Requirement Statement	Justification	Verification Success Criteria	Verification Method	Phase	Subsystem Allocation	Verification Results
RF.8	Before every launch, all black powder used SHALL be measured and weighed prior to heading to the launch field.	Measuring black powder prior to heading to the launch field reduces measurement error introduced by launch field conditions. A windy day could blow away black powder particles during the measurement process if done at the launch site which could cause harm to personnel and the environment.	**(1)** Packaged black powder is the exact amount used in the prior ejection test for the rocket. **(2)** Black powder is packaged in a sealed and labeled container.	**(1) Measurement:** Calculate black powder measurements and test these values during ejection testing. **(2) Inspection:** Inspect transport materials and ensure containers and anti-static bags are well stocked.	Verified	Recovery	**(1)** See Section 3.6.5 for black powder calculations. **(2)** The black powder for the main primary, main secondary, drogue primary, and drogue secondary are measured the day prior to launch and stored in sealed containers. These containers are then placed in an anti-static bag inside an energetics box.
RF.9	The secondary black powder charge SHALL produce a 25% increase in generated pressure.	Secondary black powder charges represent redundancy in the ejection charges. It's purpose is to separate the launch vehicle if the primary charge does not separate the launch vehicle. The secondary charges must be a measurable amount larger than the primary charge. If the sections do not separate, the recovery system does not function properly and can result in the total failure of the mission.	Secondary black powder charge produces a 25% larger generated pressure than the primary black powder charge.	Inspection: Verify that the calculations for the secondary black powder charge produces 25% more pressure than the primary charge.	Verified	Recovery	(1) See Section 3.6.5 for the an explanation on the generated pressure reasoning. (2) The drogue secondary charge is 3.5g (drogue primary is 2.8g) and the main secondary charge is 3.8g (main primary is 3.1g).
RF.10	The primary ejection charge SHALL be calculated and verified by ejection tests.	The primary charge must be calculated and not estimated based on size of the bay. This is done to ensure there is no major damage to recovery components or the launch vehicle. Ejection charge sizing is tested according to RF.24.	**(1)** Black powder calculated in report documentation. **(2)** A successful ejection test occurs prior to all subscale & full-scale launches.	**(1) Inspection:** Inspect report documentation for black powder calculations. **(2) Demonstration:** Demonstrate successful ejection tests prior to all launches of a competition vehicle.	Verified	Recovery	**(1)** See Section 3.6.5 for the black powder calculations. The main primary black powder charge was 3.1g and the drogue primary charge was 2.8g. **(2)** See Section 8.1.13 for the results of the Full-scale ejection test. The test was successful with both sections separating as planned.
RF.11	All black powder calculations SHALL be done using the Ideal Gas Law.	Black powder calculations are performed in Section 3.6.5. This method is from a reputable source and derived from Ideal Gas Law. Verifying the location and method of the equation reduces calculation and handle-ment error.	Black powder equations are based on the Ideal Gas Law.	**Inspection:** Verify that the website used for black powder calculations is from a reputable source.	Verified	Recovery	The primary calculation method for the black powder charges was the Ideal Gas Law. See Section 3.6.5 for black powder calculations.

Table 8.43: 2024-2025 Team-Derived Recovery Requirements

Req. No.	Requirement Statement	Justification	Verification Success Criteria	Verification Method	Phase	Subsystem Allocation	Verification Results
RF.12	When assembling the AV Bay, the black powder charges SHALL be securely contained within the "blast caps" with blue tape. To ensure that there is no leakage, the AV Bay SHALL be turned upside down and lightly shooked over white paper. If there is any black residue on the paper, the black powder SHALL be re-measured and the entire process repeated.	Using blue tape over black powder storage containers contains all black powder particles contained in a set location prior to ejection. This verifies that all black powder is ignited and that all of the black powder required, as calculated in Equation 3, is utilized. Additionally, it ensures no leakage for safety and environmental reasons (See RF.8 and RS.1).	**(1)** Black powder charges fit inside designated blast caps. **(2)** Black powder charges are secured with filling and blue tape. **(3)** Black powder charges are turned upside-down to test black powder containment.	**Inspection:** Verify that the Launch Day Checklist includes these procedures.	Verified	Recovery	**(1) & (2)** The utilized charge wells are capable of properly containing the black powder charges and are sealed with blue tape. **(2) & (3)** The black powder charges are verified to be fully sealed prior to integration/storage. See Appendix 9.1.2 for the Full-scale launch day checklist (Step 2.16).
RF.13	Altimeters SHALL be tested prior to every launch by simulating flight. Flight will be simulated by placing the altimeter in a vacuum chamber and slowly decreasing the pressure to simulate an increase in altitude and then slowly decreasing the pressure to simulate the descent of the vehicle.	Altimeters are selected to meet the NASA Requirement 2.18.2 that requires the team to verify the apogee of the rocket. Testing the altimeters reduces the risk of error that the altimeters don't work properly in flight. It also verifies that the altimeters are properly programmed.	Altimeters are tested prior to all launches.	**Test:** Altimeter test is included in report documentation.	Verified	Recovery	The altimeters have been tested prior to all launches. For the VDF launch, the altimeters were tested on 2/26/2025. See Section 8.1.10 for the Altimeter Test results.
RF.14	On the launch pad, the altimeters SHALL be armed one at a time to ensure that the continuity beeps don't overlap.	Two altimeters are used to verify the apogee of the rocket. Overlapping continuity beeps can create confusion and lead to incorrect determinations that all systems are functioning correctly. Apogee determines when the various black powder charges detonate and time the main and drogue parachute exits. If not followed, there is an increase risk of mission failure and total loss of the rocket.	Altimeter continuity beeps don't overlap on launch pad.	**Inspection:** Verify that the Launch Day Checklist arms one altimeter at a time.	Verified	Recovery	The altimeters are armed one at a time and launch pad personnel are able to identify the distinct continuity beeps. See Appendix 9.1.2 for the utilized Full-scale Launch Day Checklist (Step 8.23 - 8.25).
RF.15	Prior to launch day packing, all parachutes SHALL be inspected to visually verify that there are no holes, tears, or missing stitches.	Holes, tears, and missing stitches in the parachutes impact the parachute calculations made in Section 3.6.2. These deformities can decrease the effectiveness of the parachute and increase the kinetic energy values past what is allowed in NASA Requirement 3.3.	Parachutes do not have holes or missing stitches on launch day.	**Inspection:** Inspect all parachutes owned by the team and items used for this year's competition rocket.	Verified	Recovery	All team-owned parachutes have been cataloged and all damaged parachutes have been discarded. Both the selected main and drogue parachutes have been patched using parachute patches (no holes or missing stitches). See the Night Before Launch Checklist (Appendix 9.1.2) for confirmed verification.

Table 8.43: 2024-2025 Team-Derived Recovery Requirements

Req. No.	Requirement Statement	Justification	Verification Success Criteria	Verification Method	Phase	Subsystem Allocation	Verification Results
RF.16	Prior to launch day packing, shroud lines SHALL be inspected and detangled to verify that they are properly connected to the parachute fabric with no frayed edges of knots.	Similarly to Requirement RF.15, frayed and tangled shroud lines impact the integrity of the parachute performance and the calculations made in Section 3.6.2. Parachute failure would result in the total failure of mission objectives.	Shroud lines are not frayed and are properly connected to parachutes on launch day.	**Inspection:** Inspect all parachutes owned by the team and items used for this year's competition rocket.	Verified	Recovery	All team-owned parachutes have been cataloged and all damaged parachutes have been discarded. Both the selected main and drogue parachutes have no shroud line damage. See the Night Before Launch Checklist (Appendix 9.1.2) for confirmed verification.
RF.17	Packing parachutes for launch vehicle integration SHALL only be done with the supervision of someone knowledgeable of the recovery system and knows how to correctly fold parachutes as approved by the Recovery or Team Lead.	Parachute deployment is vital for the successful recovery of a rocket. Improperly packing and placing the parachute into the rocket could result in total mission failure or the failure of NASA Requirement 3.3.	Parachutes are packed under the supervision of a qualified individual.	**Inspection:** Inspect the Launch Day Checklist for this supervision requirement.	Verified	Recovery	Parachute packing is done with the supervision of the Recovery Lead and/or the Team Lead. See the Night Before Launch Checklist (Appendix 9.1.2) for confirmed verification.
RF.18	All parachutes SHALL be folded with the seams of the shroud line connections facing inward.	Having the seams of the shroud lines facing outwards increases the risk of shroud lines tearing and fraying. Following this procedure can potentially increase the lifespan of the parachute and ensure that Requirement RF.17 is met.	Parachutes are folded with the shroud line seams facing inward.	**Inspection:** Inspect parachute folding and ensure seam location.	Verified	Recovery	Parachutes are pre-packed (prior to launch day) with the shroud line connections/seams inward. See the Night Before Launch Checklist (Appendix 9.1.2) for confirmed verification.
RF.19	Prior to launch the Nomex cloths SHALL be inspected for holes. If any inconsistencies are found, another Nomex cloth SHALL be utilized.	Nomex clothes protect the parachute from the ejection charge explosion. The charges could burn holes in the parachute and reduce parachute effectiveness if not protected.	Utilized Nomex cloths are free of large holes, tearing, and frayed edges.	**Inspection:** Verify that Nomex cloths are quality checked prior to launch.	Verified	Recovery	Utilized nomex clothes have been inspected for holes/tears and have been patched when required. See the Night Before Launch Checklist (Appendix 9.1.2) for confirmed verification.
RF.20	All shock cord used inside the vehicle SHALL be accordion folded.	An accordion fold of the shock cord reduces the risk of entanglement during ejection.	Shock cord is accordion folded.	**Inspection:** Verify that the shock cord is accordion folded and is verified in Launch Day Checklist.	Verified	Recovery	All shock cord utilized in the LV is accordion folded (See Figure 3.79). See Section 7.2 for the Full-scale Launch Day Checklist (Steps 4.2, 6.6).

Table 8.43: 2024-2025 Team-Derived Recovery Requirements

Req. No.	Requirement Statement	Justification	Verification Success Criteria	Verification Method	Phase	Subsystem Allocation	Verification Results
RF.21	All knots used in the shock cord SHALL be self-tightening knots.	The shock cord is under tensile stress during the recovery events. Self-tightening knots prevent knot slippage that could cause portions of the shock cord to separate from itself or the launch vehicle.	Shock cord only uses self-tightening knots.	**Inspection:** Verify that only self-tightening knots are used in the shock cord.	Verified	Recovery	All team-owned shock cord has been cataloged and only contains self-tightening knots. See the Night Before Launch Checklist (Appendix 9.1.2) for confirmed verification.
RF.22	Prior to every launch of a NASA SL competition vehicle, the team SHALL perform an ejection test to verify ejection charges in the launch vehicles complete launch configuration.	Ejection charges calculated with Equation 3 in Section 3.6.5 need to be verified with real-life tests. This reduces risk of improper or insufficient black powder measurements and increases the change of successful ejection on launch day. An ejection test must be performed before every launch because of possible changes in the packing of recovery components and the changes in masses that affect how the launch vehicle separates.	A successful ejection test is performed prior to all subscale and full-scale launches.	Demonstration: Perform a successful ejection test for all launch vehicles.	Verified	Recovery	A successful ejection test was performed on 3/3/2025 (prior to VDF launch). See Section 8.1.13 for the Full-scale Ejection Test results.
RF.23	During the preparation of the launch vehicle for launch day or ejection testing, biodegradable insulation SHALL be packed into the rocket between the ejection charges and recovery equipment.	Packing the rocket with insulation reduces the area in compartments where black powder charges are located. Decreases the total volume of the compartment reduces the pressure required to separate the rocket and improves the performance of the black powder charges calculated in Section 3.6.5. This also mitigates the forces from the ejection charges on the recovery equipment.	**(1)** Biodegradable insulation is used for packing material in the Launch Vehicle. **(2)** Insulation is placed between parachutes and black powder charges.	**(1) Inspection:** Verify that biodegradable insulation is included in the Launch Day Packing List. **(2) Inspection:** Verify that insulation is placed with the black powder charges and parachutes.	Verified	Recovery	**(1) & (2)** Biodegradable insulation is included in the required materials of the Full-scale Launch Day Checklist (See Section 2, 3, 4,and 6 of the Checklist in Section 7.2).
RF.24	During field recovery of any NASA SL competition rocket, before touching the launch vehicle, an image SHALL be taken to identify landing configuration and landing state of the rocket. Following the image, the rocket SHALL be secured and the altimeters disarmed.	Verifying and providing documented evidence of launch vehicle landing proves the quality and effectiveness of the recovery system. Additionally, it helps certify the payload capsule orientation data for the NASA challenge. This meets NASA Requirement numbers 2.18.4.2 and 2.19.1.8.2.	**(1)** Photos are taken of the Launch Vehicle prior to the start of recovery events. **(2)** Altimeters are disarmed.	**Inspection:** Ensure the procedure for disarming altimeters and taking recovery photos is included in the recovery section of the Launch Day Checklist.	Verified	Recovery	Photos of the as-landed LV are taken immediately when approaching the landed LV during a launch attempt. See Section 7.2 for the Full-scale Launch Day Checklist (Step 9.4).
RF.25	Prior to launching a NASA SL competition rocket, GPS coordinates of the launch site SHALL be recorded.	Recording GPS requirements helps verify that we are meeting NASA Requirement 3.11 .	GPS coordinates are written down.	Inspection: Verify that the GPS coordinates are recorded in Launch Day Checklist.	Verified	Recovery	The launch pad coordinates are recorded in the utilized Full-scale Launch Day Checklist Step 8.4 (Appendix 9.1.2).
RF.26	Prior to moving a NASA SL competition rocket during field recovery, GPS coordinates of the landing site SHALL be recorded.	Recording GPS requirements helps verify that we are meeting NASA Requirement 3.11 .	GPS coordinates are written down.	**Inspection:** Verify that the GPS coordinates are recorded in Launch Day Checklist.	Verified	Recovery	The landing coordinates of the LV is recorded in the utilized Full-scale Launch Day Checklist Step 9.13 (Appendix 9.1.2) .

Table 8.43: 2024-2025 Team-Derived Recovery Requirements

Req. No.	Requirement Statement	Justification	Verification Success Criteria	Verification Method	Phase	Subsystem Allocation	Verification Results
RF.27	All threaded quick-links SHALL be additionally secured using tape during launch day assembly.	Adding tape is an extra verification that the threaded quick-link isn't accidentally disconnected during flight.	Tape is applied to threaded quick-links.	Inspection: Verify that the tape is applied during Launch Day checklist.	Verified	Recovery	Tape is placed over all threaded quick-link connections. See Appendix 9.1.2 for the utilized Full-scale Launch Day Checklist (Steps 4.8, 4.16, 4.20, 4.25, 6.11, 6.21).
Design Requirements							
RD.1	Terminal block connections SHALL only be made with commercially available electrical connectors or soldered connections.	JST connectors or soldered connections ensure reliable and secure electrical connections. Secure connections are needed to maintain proper power and current configuration.	**(1)** Electrical connectors and soldered connections are available in the team's avionics bench. **(2)** Terminal block connections are made with commercially available connections or solder.	**(1) Inspection:** Inspect avionics bench for required materials. **(2) Inspection:** Verify connections are made with either commercially available products or solder.	Verified	Recovery	**(1)** See Table 8.46 for the teams budget and purchase list. **(2)** All recovery avionics assembly is performed by or under the supervision of the Recovery Lead.
RD.2	Shock cord length SHALL be long enough to allow all independent sections to be at least 10 feet apart from each other during descent under parachute.	The main risk during descent is the various components of the rocket colliding with each other and the tangling of shock cord. This can result in damage to the launch vehicle and improper deployment of the parachutes which would could result in a complete failure of the recovery system.	Shock cord length allows for at least 10 feet of distance between sections.	**Inspection:** Verify that the calculated shock cord length between sections is greater than 10 feet.	Verified	Recovery	The shock cord lengths are 216 in (drogue), 192 in (main), and 27 in (additional). See Section 3.6.3 for shock cord calculations.
RD.3	Shock cord connections to bulkheads SHALL be maintained using only "U-bolts".	U-bolts evenly spreads the tension load from the shock cord onto the bulkhead. Dispersing the initial shock to multiple points increases bulkhead stability and generate a strong anchor point for the recovery system.	Shock cord is attached to "U-bolt" bulkheads.	**Inspection:** Inspect recovery attachment design.	Verified	Recovery	See Figure 3.81 for manufactured recovery attachment design.
RD.4	Any GPS installed in the launch vehicle SHALL have a percent error of less than 1% and can maintain a battery life at average current draw for 3 hours.	Due to the drift distances calculated in Section 3.14, the GPS must accurately depict the rocket's landing coordinates. The Eggfinder Mini GPS has a range of 1.5 miles (Table 3.7 in the PDR report) and thus satisfies NASA Requirement 3.11.	**(1)** GPS has a range of 1.5 miles. **(2)** GPS has a battery life greater than 3 hours. **(3)** GPS has a percent error of less than 1%	**(1) Test:** Test GPS battery and accuracy. **(2) Analysis:** Analyze GPS specifications and power requirements.	Verified	Recovery	**(1)** The maximum percent error over multiple tests was 0.004%. See Table 8.13 for the GPS test results. **(2)** Electronic specs guarantee a range of 1.5 miles. See Table 3.7 in the PDR report.
RD.5	All recovery harness and equipment SHALL be attached to launch vehicle attachment points with threaded quick-links.	Threaded quick-links have a high stress durability, are easy to install, and minimize the accidental disconnection during recovery events.	Threaded quick-links are used to attach recovery equipment.	**Inspection:** Check Launch Day Checklist and recovery attachment design.	Verified	Recovery	Threaded quick-links are used at all recovery attachment points. See Figure 3.79 for threaded quick-link use and Section 7.2 for the Full-scale Launch Day Checklist.

Table 8.43: 2024-2025 Team-Derived Recovery Requirements

Req. No.	Requirement Statement	Justification	Verification Success Criteria	Verification Method	Phase	Subsystem Allocation	Verification Results
RD.6	The maximum descent velocity of any section of any 2025 NASA SL launch vehicle SHALL be less than 110 feet per second.	High descent velocities under the drogue parachute could lead to high shock forces on the main parachute when it is deployed. This has the possibility to tear the shroud lines of the main parachute which leads could make the launch vehicle violate NASA Requirement 3.3.	**(1)** Parachutes are selected to remain under the maximum descent velocity. **(2)** The Launch Vehicle descent velocity is <110 f/s during subscale, VDF, and PDF launches.	**(1) Analysis:** Calculate appropriate parachute size and verify landing velocity. **(2) Demonstration:** Demonstrate and prove requirement success using data from launches.	Verified	Recovery	**(1) & (2) Analysis:** The maximum descent velocity under the drogue parachute is 100.8 fps. See Section 3.7.6 for parachute and descent velocity calculations.
Environmental Requirements							
RE.1	All packing insulation materials SHALL be biodegradable.	During rocket separation, packing material will fall out of the rocket and contaminate surrounding areas. Thus, biodegradable material that breaks down naturally overtime reduces the environmental impact and ecological footprint of the team's rocket.	The packing insulation is biodegradable.	**(1) Inspection:** Inspect Launch Day Checklist and budget for biodegradable insulation. **(2) Inspection:** Ensure insulation is biodegradable and used during Launch Day Checklist.	Verified	Recovery, Safety	**(1) & (2)** Biodegradable insulation is included in the required materials of the Full-scale Launch Day Checklist (See Sections 2, 3, 4, and 6 of the Checklist in Section 7.2).
RE.2	When adhering rubber-bands to shock cord for recovery packing, the rubber-bands SHALL be connected to the shock cord such that they will not completely separate from the launch vehicle and remain tethered to the shock cord after it is released during flight.	Rubber bands are used to keep the shock cord untangled during vehicle assembly. Keeping shock cord untangled reduces risk of rocket sections colliding during recovery events. Rubber bands are not biodegradable and to prevent littering, they must be attached to the shock cord. Thus, the rubber bands can be collected and properly disposed of after field recovery.	The rubber bands remain attached to the shock cord for the entire duration of the flight.	**(1) Inspection:** Verify Launch Day Checklist includes attaching rubber bands to shock cord. **(2) Inspection:** Verify that the rubber bands are still attached to the shock cord during recovery.	Verified	Recovery	The shock cord rubber bands are tied to the shock cord to prevent littering during recovery events. See Appendix 9.1.2 for the utilized Full-scale Launch Day Checklist (Step 4.3, 6.7).
RE.3	All recovery equipment SHALL be tethered to the launch vehicle in the fully separated descent state.	To prevent potential littering of the launch field, all non-biodegradable items are affixed to some section of the recovery system. This also enables the team to relaunch on the same day with minimal repairs as required by NASA Requirement 2.3.	All components of the launch vehicle remain fully attached upon landing.	**(1) Inspection:** Inspect Launch Vehicle recovery design. **(2) Inspection:** Verify all recovery equipment is attached to the Launch Vehicle during field recovery.	Verified	Recovery	All sections remain tethered during descent. See Section 3.6.3 and Figures 3.80 and 3.78 for the LV recovery design.
RE.4	All recovery personnel SHALL exercise caution during field recovery to avoid damage to crops, vegetation, or sensitive areas by carefully observing their surroundings.	All launch fields utilized during the competition are active farmland. To minimize our team's environmental impact and respect the landowner's property, interactions with the field should be kept to an absolute minimum.	No visible damage to crops, vegetation, or sensitive areas is observed after recovery operations.	**(1) Demonstration:** Personnel successfully demonstrate adherence to protocols by avoiding damage to crops, vegetation, or sensitive areas. **(2) Inspection:** Post-recovery field inspections confirm no visible damage to crops, vegetation, or sensitive areas.	Verified	Recovery	Minimal damage to local launch field experienced. All recovery personnel walked in between rows and avoided plant life as much as possible.
RE.5	The number of personnel involved in recovery SHALL be limited to a maximum of 3 individuals, not including subsystem leads, as determined by the recovery operations plan, to minimize environmental and agricultural impacts.	All launch fields utilized during the competition are active farmland. To minimize our team's environmental impact and respect the landowner's property, interactions with the field should be kept to an absolute minimum.	The number of people that recover the Launch Vehicle is limited to the personnel specified in the Launch Day Checklist	**Inspection:** Inspect Section 9 of Launch Day Checklist for required personnel.	Verified	Recovery	Only three additional individuals (not including subsystem leads) participated in the field recovery of the LV. See Appendix 9.1.2 for the VDF Full-scale Launch Day Checklist and field recovery personnel.

Table 8.43: 2024-2025 Team-Derived Recovery Requirements

Req. No.	Requirement Statement	Justification	Verification Success Criteria	Verification Method	Phase	Subsystem Allocation	Verification Results
Safety Requirements							
RS.1	All black powder SHALL be transported to the launch field in a tightly sealed containers which are placed into anti-static bags. During the transport, the sealed containers SHALL be stored in a flame-proof explosive containment box.	Black powder has the potential to combust and explode due to small static electric currents. To prevent early ejection or explosion of black powder, the powder must be stored in a sealed container located in an explosive containment box. This is for personnel and equipment safety.	**(1)** Black powder charges are sealed in separate containers. **(2)** Black powder containers are transported in anti-static bags. **(3)** Anti-static bags are transported inside a flame-proof explosive containment box.	**Inspection:** Launch Day Packing List includes black powder in containers and anti-static bags.	Verified	Safety	**(1), (2), & (3)** Black powder is stored inside sealed containers in an anti-static bag. The anti-static bag is stored inside an explosive containment box.
RS.2	During the event of a CATO of the launch vehicle, the designated Safety Officer SHALL ensure that the black powder charges have blown prior to any other interaction with the launch vehicle by other team members.	During a motor CATO there is the potential that the black powder charges did not explode. A live black powder charge poses serious risk to any surviving part of the launch vehicle or internal equipment, as well as local personnel.	Recovery Lead and the designated Safety Officer are the first to approach the rocket during a CATO event.	**Inspection:** See HPRC Safety Handbook about safety procedures regarding a CATO.	N/A	Safety	N/A
RS.3	The safety officer and/or recovery lead SHALL be the first to approach the rocket and to “touch” the rocket during launch day field recovery.	Similarly to Requirement RS.2, at the recovery of a rocket there is the potential risk of live black powder. To prevent a detonation, a specific procedure, PPE, and training is required.	**(1)** The Safety Officer/ Recovery Lead is first to approach the rocket. **(2)** Unblown black powder charges do not cause additional harm to the Launch Vehicle or personnel.	**(1) Inspection:** Launch Day Checklist Section 9 details recovery procedures including personnel who approach the rocket after landing. **(2) Demonstration:** Personnel are not injured.	Verified	Recovery, Safety	The acting Safety Officer and/or Recovery Lead is the first to approach the landed LV. See Full-scale Launch Day Checklist in Section 7.2.
RS.4	All altimeters SHALL be turned off if they are still functioning during CATO event or field recovery.	As stated in RS.2, there may be unexploded black powder still in the launch vehicle after a CATO. To reduce the risk off the black powder exploding, altimeters must be disarmed in the same manner that they must be disarmed after any flight.	All altimeters are disarmed after flight and black powder charges are not set off accidentally.	**Inspection:** Launch Day Checklist Section 9 details recovery procedures including disarming altimeters prior to continuing with recovery checklist. **Inspection:** See HPRC Safety Handbook about safety procedures regarding a CATO.	Verified	Recovery	The Full-scale Launch Day Checklist has details regarding disarming altimeters. The HPRC Safety Handbook (Appendix 9.4) has details regarding CATO recovery.
RS.5	All appropriate procedures to avoid the pre-emptive ejection of black powder during CATO recovery SHALL be followed. This includes, but is not limited to, wearing safety glasses and fireproof gloves.	In the event of a CATO, ejection charges are not necessarily blown because the launch vehicle did not reach the altitude at which parachutes were programmed to be deployed. Mitigation to Hazard TF.6 must then be followed to ensure pre-emptive ejection of black powder does not injure personnel.	In the event of a CATO, the Launch Vehicle is recovered with no additional damage to the subsystems of the Launch Vehicle and personnel are not injured.	**Inspection:** See HPRC Safety Handbook about safety procedures regarding a CATO.	N/A	Safety	N/A
RS.6	During field recovery, all personnel SHALL wear long pants, closed-toed shoes, safety glasses, and gloves. If they are a part of the initial handling of the rocket, the personnel SHALL wear fire-proof gloves.	Our launch field, prior to Huntsville, is an active farm and can contain many skin irritants. Long pants prevent skin irritation and allergic reactions. This would allow for the field recovery timeline to continue smoothly with little to no breaks or pauses. Personnel are required to wear gloves in accordance with mitigation to Hazard TF.6.	The Launch Vehicle is recovered with no harm to personnel due to launch field conditions.	**Inspection:** Launch Day Checklist Section 9 details the required materials for field recovery.	Verified	Safety	All field recovery personnel wear closed-toed shoes and long pants during field recovery. All participants are informed of this information during the pre-launch safety briefing.

Table 8.43: 2024-2025 Team-Derived Recovery Requirements

Req. No.	Requirement Statement	Justification	Verification Success Criteria	Verification Method	Phase	Subsystem Allocation	Verification Results
RS.7	When approaching the rocket during field recovery, the parachute SHALL be approached and secured from the back to avoid entanglement in the shroud lines.	During landing, parachute shroud lines can become entangled with the surrounding launch field. On windy days, these parachutes can drag rocket components across the field and interact with local team members. Shroud lines during windy days increase the risk of strangulation during field recovery if approached from the front. In the event where personnel is entangled in shroud lines, the shroud lines would have to be cut and the parachute becomes unusable. Safety risks concerning shroud lines can be found in Section 7.4.	The Launch Vehicle is recovered during field recovery with no damage to parachutes and no harm to personnel.	**Inspection:** Launch Day Checklist Section 9 details the proper procedure for recovery of parachutes during field recovery.	Verified	Safety	The field recovery personnel are instructed to approach a parachute from behind (billowing side) during field recovery. See Step 9.5 in the Full-scale Launch Day Checklist in Section 7.2.
RS.8	In the event that black powder charges did not fully ignite during launch vehicle recovery, the team SHALL take every precaution to remove the section for the field and transport it back to the team's lab for a controlled dismantle.	If ejection charged did not ignite during flight, there is a change they ignite on the field accidentally. Taking precautions to ensure that ejection charges do not ignite or spill from the AV Bay during/after recovery ensures that black powder does not litter the launch field.	Unblown ejection charges do not ignite after flight/ during recovery resulting in personal injury or launch field contamination.	**Inspection:** Launch Day Checklist Section 9 details the proper procedure for recovery of unblown ejection charges.	Verified	Safety	AVAB bulkheads are checked for unblown charges by the Recovery Lead or Safety Officer only. The respective lead/officer properly blows any charges. See Steps 9.9 and 9.20 in the Full-scale Launch Day Checklist in Section 7.2.

Table 8.44: 2024-2025 Team-Derived Air Brake Requirements

Req No.	Requirement Statement	Justification	Verification Success Criteria	Verification Method	Phase	Subsystem Allocation	Verification Results
Functional Requirements							
PF.1	Prior to any launch of a NASA SL competition rocket with the addition of a version of the competition payload, all payload-related sensors SHALL be tested via a coded script/function the day prior to launch.	The entire payload challenge is judged based off the successful transmission of various data points. To guarantee that the data is collecting and transmitting properly, the verification of sensors is needed. Without, there is the potential of failing the payload challenge and decreasing our team's score.	**(1)** Test code is developed for payload functions. **(2)** Payload sensors are tested with test code prior to launch day. **(3)** A successful payload sensor test is completed prior to launch day.	**(1) Inspection:** Verify that test code is completed or planned to be completed prior to PDF. **(2) & (3) Demonstration:** Demonstrate successful test code prior to launch day.	Verified	Payload Team	**(1), (2), & (3)** The payload has several software VV&T tests. See Sections 8.2.1 and 8.2 for the planned sensor tests and procedures.
PF.2	During launch day assembly of a NASA SL competition rocket with the addition of a version of the competition payload, a Payload Lead SHALL be present for the entirety of payload assembly and payload-related checklist items.	The Payload Leads are primarily responsible for the design, software, and construction of the competition payload. They have the most information regarding the details of the system and would provide accurate information in the event that an issue arises during assembly.	A Payload Lead oversees the assembly and integration of the payload into the Launch Vehicle.	**Inspection:** Verify attendance on Launch Day Checklist.	Verified	Payload Team	All payload leads are present during the assembly of the payload during launch day. See Section 2 of the Full-scale Launch Day Checklist (Section 7.2) for personnel verification.
PF.3	During the construction of any version of the competition payload, a member of the payload team SHALL be present.	Similarly to Requirement PF.2, the Payload Leads have the most information and guidance for the payload project. They are responsible for leading the entire development of the payload.	A Payload Lead oversees the construction of the competition payload.	**Inspection:** Payload Leads organize payload meetings where all Payload Leads can attend.	Verified	Payload Team	A Payload Lead runs the payload construction meetings and at least one member is present for the entirety of the meeting.

Table 8.44: 2024-2025 Team-Derived Air Brake Requirements

Req. No.	Requirement Statement	Justification	Verification Success Criteria	Verification Method	Phase	Subsystem Allocation	Verification Results
PF.4	During the testing of any version of the competition payload, a member of the payload team SHALL be present.	See Requirement PF.3.	A Payload Lead oversees the testing of the competition payload.	**Inspection:** Payload Leads organize payload meetings where all Payload Leads can attend.	Verified	Payload Team	A Payload Lead conducts all VV&T testing (Section 8.2).
PF.5	Any soldering of electronics, wires, and sensors SHALL be done only under the supervision of a payload team member.	See Requirement PF.3.	A Payload Lead oversees the soldering of the competition payload.	**Inspection:** Payload Leads organize payload meetings where all Payload Leads can attend.	Verified	Payload Team	A Payload Lead supervised the entirety of the electronic construction and manufacturing (Section 4.5).
PF.6	Any call-sign used during a flight is the call-sign of a consenting and present member of the NC State High-Powered Rocketry Club.	Per FTC requirements and services, a unique call sign is assigned to each amateur station during the processing of their license application. These call signs represent and are meant for one individual. To use a call-sign without consent presents legal and moral issues.	**(1)** Payload is designed to accommodate changes in call-signs. **(2)** At least one member of the Payload Team has their own call-sign. **(3)** The owner of the utilized call-sign is present during tests and launch.	**(1) Inspection:** Verify payload design accommodates initialization changes. **(2) Inspection:** Inspect call-sign authorization for each Payload Lead. **(3) Demonstration:** Verify that call-sign attendance is checked in Launch Day Checklist.	Verified	Payload Team	**(1) & (2)** The call-sign is able to be changed on the launch field or in the days leading up to the launch. The call-sign is approved by a Payload Lead prior to being utilized. **(3)** Call-sign member attendance is verified in Full-scale Launch Day Checklist (Section 7.2).
PF.7	All 3D-printed material SHALL undergo structural testing and have a minimum infill of 25%.	3D printing material strength depends on the orientation of the object being printed, direction of the filament, and the infill percentage.	**(1)** The payload housing is made of 3D printed material. **(2)** The 3D printed material has a minimum infill of 25%.	**(1) Inspection:** Confirm the payload housing design is primarily made of 3D printed material. **(2) Inspection:** Check that the 3D printer settings are set to an infill greater than or equal to 25% prior to printing payload housing parts.	Verified	Payload Structural Integration	**(1) & (2)** All 3D printed items have been printed with a minimum infill of 25% (Section 4.5.1).
PF.8	For all electronics and wires included in any version of the competition payload, all connections SHALL be secured via two methods. These methods may include, but are not limited to: solder, electrical tape, and hot glue.	Redundancy in wire and electronic connects offer a fail safe in case one connection method fails.	**(1)** Wire connection methods are stocked and purchased prior to construction. **(2)** Payload electronic connections are secured using at least two methods.	**(1) Inspection:** Inspect budget section for purchased material. **(2) Inspection:** Inspect constructed payload and ensure two method connections.	Verified	Payload Electronics	**(1) & (2)** The payload wires and electronic connections have been organized and secured using two attachment mechanisms. This includes, but is not limited to hot glue, solder, heat shrink, etc. See Section 4.5.2 for payload manufacturing details.

Table 8.44: 2024-2025 Team-Derived Air Brake Requirements

Req. No.	Requirement Statement	Justification	Verification Success Criteria	Verification Method	Phase	Subsystem Allocation	Verification Results
PF.9	Payload battery SHALL be able to be active for over 3 hours at average payload power draw.	As defined in NASA Requirement 2.6, the launch vehicle must be able to remain in launch ready condition on the pad for 3 hours. Similar to Requirements RD.3 and RD.6, to ensure that payload batteries meet this requirement, they must be able to sustain average payload power draw for 3 hours. Failure of the payload batteries would result in complete payload failure, as the challenge is entirely electronics based.	Payload battery is selected to maintain battery life for 3 hours at a average power draw.	**Analysis:** Analyze selected battery and perform an engineers estimate on battery life.	Verified	Payload Electronics	See Section 8.2.5 for the Payload Power Supply Verification Test. The test was successful and the payload is able to withstand 3 hours at average power draw.
PF.10	The payload computer SHALL detect sensor failure while the payload is armed and attempt to reset/restart the software connection.	Functional sensors are the building block for this payload challenge. Having system checks that attempt to reset and restore connectivity mid-flight or after the flight software is running reduces the likelihood of sensor failure and eliminates the need for user intervention.	Software has code that attempts to reset/restart the software connection if sensor failure is detected.	**(1) Inspection:** Verify inclusion of reset/restart software in payload code. **(2) Test:** Conduct payload data collection and transmission tests and verify the ability to correct a failing sensor.	Verified	Payload Electronics, Payload Software	**(1) & (2)** The payload incorporates code that aims to restart a sensor connection if a failure is detected. See Section 8.2.1 for the Payload Data Collection Test that determines the effectiveness of the software. Additionally, see Section 8.2.3 for the Remote Override Test.
PF.11	The GPS SHALL be able to obtain a fix within 2 minutes of landing.	The payload has a maximum of 5 minutes to transmit after landing, and may lose it's fix during the motor burn period. Thus, re-obtaining a GPS fix must occur within a short period of landing in order to have valid landing coordinates included in the transmission.	GPS obtains a fix within 2 minutes after landing.	**Test:** During a flight test, verify that the GPS obtains a fix in 2 minutes or less.	Verified	Payload Electronics	The GPS obtained a fix within the 2 minute window during the Data Collection Test (Section 8.2.1).
PF.12	The payload computer SHALL obtain data packets (data collection) at a minimum rate of 15 samples per second.	A minimum data collection rate of 15 samples per second ensures sufficient accuracy and resolution for measuring the various data points. This rate allows for reliable decision making and system monitoring, allowing the transmitted data to be of higher quality.	**(1)** Code is setup to receive data packets at a minimum of 15 samples per second. **(2)** Sample rate is recorded to be at least 15 samples per second during data transmission tests.	**Test:** Determine the sample rate during a flight simulation or data collection test.	Verified	Payload Software	The normalized frequency output ranged from 123 Hz to 127 Hz, far exceeding the previously outlined requirements, during the FUSE Data Collection Rate Test (Section 8.2.8).
PF.13	The payload SHALL obtain data at 15 samples per second if a sensor fails while the code is running and fails to reconnect/reboot.	Data required for a specific transmitted data point needs to properly transmit, despite a failed sensor. Thus, the sensor or another redundant sensor must still transmit at the same speed as other functioning sensors. Additionally, it reduces code complexity to have all sensors (regardless of whether or not they are working) to obtain data at the same sample rate.	Data obtains data at the same sample rate, even if a sensor fails.	**Test:** Determine the sample rate during a flight simulation or data collection test.	Verified	Payload Software	The sample rate was determined to be 123 Hz to 127 Hz during the WARHEAD FUSE Data Collection Rate Test (Section 8.2.8).

Table 8.44: 2024-2025 Team-Derived Air Brake Requirements

Req. No.	Requirement Statement	Justification	Verification Success Criteria	Verification Method	Phase	Subsystem Allocation	Verification Results
PF.14	The payload SHALL emit a light or sound notification if an individual sensor fails to initialize/provide data on software startup.	A visual or audio failure response enables the team to more quickly catch a payload system error. Additionally, this type of response would allow for more seamless sensor testing. A team member would be more readily able to determine proper functionality of a sensor or if the sensor has made a software connection.	**(1)** A light or sound-emitting device is included in the payload circuits diagrams. **(2)** A light or sound-emitting device is included in the final manufactured payload assembly.	**(1) Inspection:** Inspect circuits diagrams for light or sound-emitting device. **(2) Inspection:** Verify lights or a sound-emitting device is demonstrated in the manufactured payload assembly.	Verified	Payload Electronics, Payload Software	**(1) & (2)** The payload utilizes a light to determine proper sensor configuration and the status of the push-to-transmit(PTT) toggle and the FUSE subsystem status (Section **??**).
PF.15	The payload software SHALL filter out unreasonable data points (values outside the range of sensor possibilities, etc) to reduce data skewing.	Sensors can sometimes offer faulty or out-of-bounds data. Setting hard limits for a specific data type, enables a more accurate system analysis and can improve the accuracy of the survivability metric.	Acceptable data limits are hard-coded into the payload software/code.	**Inspection:** Determine and verify inclusion of sensor data limits in payload code.	Verified	Payload Software	The hard-coded values are incorporated into the payload software (Section 4.3).
PF.16	Data SHALL transmit regardless of antenna polarization (orientation).	The Nose Cone/Payload Bay lands under the support of the main parachute. The payload is unable to verify a single landing position at every launch. Thus, the payload antenna must be capable of transmitting to the receiver regardless of its landing orientation.	Payload is able to transmit in multiple antenna orientations.	**Test:** Conduct an antenna polarization test that evaluates the effects of antenna orientation on the transmission capabilities.	Verified	Payload Electronics, Payload Software	The antenna is able to transmit, regardless of orientation. See Section 8.2.7 for the Antenna Polarization Test.
PF.17	The payload software SHALL be able to override the payload up to 2000 feet away.	The maximum recovery drift distance (Table 3.14) is comparable to the 2000 ft distance. In the event that the payload is posing a danger to the LV or the people attending the launch, the payload must be able to be remotely shut down.	The remote override commands are received at or over a 2000 ft distance.	**Test:** Conduct a remote override range test and verify the max distance the override command can be received from.	Verified	Payload Electronics, Payload Software	The payload received override commands at distances up to 2088.90 feet from the ground station. See Section 8.2.3 for the Remote Override Range Test.
PF.18	The STEMnauts SHALL remained contained under impacts with a kinetic energy value of 75 ft-lbs or lower.	The max kinetic energy of the vehicle is limited to 75 ft-lbs and an objective of the payload is to securely house four STEMnauts. Thus, the STEMnauts must remain properly contained in the payload capsule for all impact energies of 75 ft-lbs or less.	STEMnauts remain intact and secured within the payload capsule during a drop test resulting in a kinetic energy of 75 ft-lbs.	**Test:** Conduct a Nose Cone/Payload Bay impact test at a kinetic energy of 75 ft-lbs.	Verified	Payload Structural Integration	The Nose Cone and STEMCRaFT successfully withstood a drop test with the maximum allowable kinetic energy. The STEMnauts remained fully secured within the capsule. See Section 8.2.11 for the STEMCRaFT Impact Test.
PF.19	All payload components SHALL withstand a direct impact with a kinetic energy of 75 ft-lbs.	The max kinetic energy of the vehicle is limited to 75 ft-lbs per NASA Requirements. Thus, all electronic mounting and sled configuration must withstand the impact force at max kinetic energy.	Payload electronics, structure, and software connections remain in-tact after a maximum kinetic energy drop test.	**Test:** Conduct a Nose Cone/Payload Bay impact test at a kinetic energy of 75 ft-lbs.	Verified	Payload Structural Integration	The Nose Cone and STEMCRaFT successfully withstood a drop test with the maximum allowable kinetic energy. All electronics and software remained stable throughout. See Section 8.2.11 for the STEMCRaFT Impact Test.

Table 8.44: 2024-2025 Team-Derived Air Brake Requirements

Req. No.	Requirement Statement	Justification	Verification Success Criteria	Verification Method	Phase	Subsystem Allocation	Verification Results
Design Requirements							
PD.1	The broadcast call-sign SHALL not be hard-coded for transmission.	Different call-signs may have to be used based on personnel availability, and using a call-sign without permission is forbidden in Requirement PD.3. Therefore, call-signs cannot be hard-coded into the payload code.	**(1)** Call-sign is not hard-coded in payload software. **(2)** Call-sign can be changed on launch day.	**(1) Inspection:** Inspect payload software design and confirm that the call-sign is not hard-coded. **(2) Inspection:** Inspect payload software design and confirm that the call-sign can be changed.	Verified	Payload Software	The utilized call-sign can be changed the day of launch. See Section 4.3 for payload software design.
PD.2	The STEMCRaFT SHALL be primarily constructed using 3D printed material and techniques.	3D printing allows for improved flexibility and accuracy when it comes to tight design constraints and complex geometry.	Payload housing and electronics sled is primarily made of 3D printed material.	**Inspection:** Inspect payload design and material and confirm that it is will be primarily 3D printed.	Verified	Payload Structural Integration	The payload capsule and electronic sleds are made of 3D printed material with a 25% infill. See Figure 4.16 and 4.21b for the manufactured payload housing and sled configuration.
PD.3	Payload SHALL fit into the Nose Cone for both subscale and full-scale designs.	The Payload Team has selected a large antenna. To compensate for the long length requirement, the payload has been located to the Nose Cone. This prevents other systems in the rocket, recovery and Air Brakes, from interfering or damaging the transmission device.	Payload design fits into nose-cone of launch vehicle.	**(1) Measurement:** Measure the available space in the nose-cone and compare to payload design. **(2) Inspection:** Verify that the payload design fits in the nose-cone with acceptable tolerances.	Verified	Payload Structural Integration	**(1) & (2)** The payload has been fully integrated into the Nose Cone. The tip of the payload is 0.25 inches from the end of the Nose Cone ballast system at maximum ballast (3.7 lbs). At the planned amount of ballast (0.46 lbs), the distance is approximately 5 inches. A diagram of the manufactured integrated assembly can be seen in Figure 4.8b.
PD.4	The combination of sensors in the payload SHALL be able to collect all data types offered in the challenge.	The team has decided to attempt all data types for transmission. Having sensors that can record multiple data types decreases the payload space in the Nose Cone and creates more room for the transmission antenna.	All data types offered are collected by the combination of payload sensors during flight.	**Demonstration:** Verify that the payload collects all possible data types, with some redundancy, after the demonstration flight.	Verified	Payload Electronics	The payload successfully collects data during flight. See Section 8.2.1 for a Data Collection Flight Test.
PD.5	All sensors SHALL be capable of operating in altitudes up to 10,000 feet above sea level.	Sensors must have reliable operation in various environments. Performance at high altitudes, while not 10,000 feet, is critical for the data points required in this challenge.	All payload sensors record data throughout the entirety of the Launch Vehicle flight.	**Demonstration:** Analyze all sensor data after flight to verify continuous operation.	Verified	Payload Electronics	The Adafruit DPS310 has manufacturer recorded pressure altitude accuracy of ±6Pa. This can be seen in Section 4.2.1 of the CDR report.

Table 8.44: 2024-2025 Team-Derived Air Brake Requirements

Req. No.	Requirement Statement	Justification	Verification Success Criteria	Verification Method	Phase	Subsystem Allocation	Verification Results
PD.6	Onboard pressure sensors SHALL record data with accuracies between +/-200Pa.	The team needs reliable pressure monitoring to receive accurate data for the challenge data points.	Pressure sensors record data within an accuracy of +/-200 Pa	**Demonstration:** Analyze the pressure data after flight to ensure accurate data collection.	Verified	Payload Electronics	The Adafruit DPS310 has manufacturer recorded pressure altitude accuracy of ±6Pa. This can be seen in Section 4.2.1 of the CDR report.
PD.7	Onboard temperature sensors SHALL record data with accuracies between +/-2C.	The team needs reliable temperature monitoring to receive accurate data for the challenge data points.	Temperature sensors record data within an accuracy of +/-2C.	**Demonstration:** Analyze the temperature data after flight to ensure accurate data collection.	Verified	Payload Electronics	The Adafruit DPS310 has manufacturer recorded accuracy of ±0.5C. This can be seen in Section 4.2.1 of the CDR report.
PD.8	Payload transmission SHALL be able to transmit to the handheld radio with a standard antenna up to 1640ft away given no obstructions and open terrain.	The launch day transmission antenna will be located on a mill silo. This is high enough that there are no trees or obstacles blocking the transmission path. 1640 feet is approximately the maximum anticipated drift distance and is slightly below the distance defined in NASA Requirement 3.11.	**(1)** Payload successfully transmits flight data at any location. **(2)** Payload is able to transmit flight data in any landing orientation.	Test: Test payload transmission at distances up to the maximum drift condition and at varying orientations.	Verified	Payload Electronics, Payload Software	A data transmission range test is performed in Section 8.2.6. The WARHEAD APRS transmission was successfully received at distances up to 2165 ft (660 m), as determined by GPS coordinates.
PD.9	The finalized data packet being transmitted SHALL not exceed 256 bytes to avoid creating a non-standard APRS message.	The team has chosen to transmit the final data points in APRS format. Thus, the byte size must correspond with the standard 256 bytes of an APRS message and contain all of the collected data points.	The final data packet (what will be transmitted) is equal to or less than 256 bytes long including non-message bytes.	**Test:** Transmission test the collected in data in APRS format and verify the full data packet is sent.	Verified	Payload Software	The team has configured the APRS data packet to be within the 256 bytes allowable in standard APRS packets. See Figure 4.3.1 for the transmission breakdown. See Section 8.2.4 for the results of the data transmission test using the above format.
PD.10	The payload software SHALL be driven by a finite state machine with the following states: standby, motor burn, coast, free fall, landing, recovery, shut down.	The finite state machine allows for the payload to process data and draw expected conclusions for different stages of the flight. It helps with the filtering of skewed data and creates a streamlined method for processing/formatting data.	The payload code contains seven distinct states: standby, motor burn, coast, free fall, landing, recovery, and shut down.	**Inspection:** Verify the incorporation of all seven states in the payload software.	Verified	Payload Software	The utilized finite state machine has seven different stages. The stages include standby, motor burn, coast, free fall, landing, recovery, and shut down.
PD.11	The payload housing SHALL be stabilized in the Nose Cone via permanent ring bulkhead.	The payload capsule is secured in the Nose Cone via two threaded rods. The threaded rods are stabilized by both the permanent ring bulkhead and the aft removable bulkhead. This prevents bending and unnecessary payload movement inside the Nose Cone.	A permanent ring bulkhead is installed into the Nose Cone.	**Inspection:** Verify the manufactured Nose Cone includes a permanent ring bulkhead and that the payload assembly can be integrated properly.	Verified	Payload Structural Integration	A permanent ring bulkhead has been installed Section **??** into the Nose Cone. See Figure 3.13 for the installed bulkhead.

Table 8.44: 2024-2025 Team-Derived Air Brake Requirements

Req. No.	Requirement Statement	Justification	Verification Success Criteria	Verification Method	Phase	Subsystem Allocation	Verification Results
PD.12	The payload capsule SHALL have an active ventilation system to provide accurate environmental data/conditions.	A fan is required to bring air from the outside environment into the payload capsule to prevent sensor overheating and simulate realistic STEMnaut conditions.	A fan is installed into the payload assembly.	**Inspection:** A fan is installed into the manufactured payload assembly.	Verified	Payload Electronics	A fan has been installed and wired into the payload assembly. See Figure 4.6 for the inclusion of a fan in the manufactured payload.
PD.13	The payload antenna SHALL have a minimum clearance of 1 inch from the Nose Cone ballast system at the planned Huntsville launch configuration.	The Nose Cone ballast system and payload antenna are in close proximity while simultaneously integrated into the Nose Cone. Having a max clearance of 1 inch maximizes the separation distance while maintaining the effectiveness of both the payload capsule and the ballast retention system.	The distance between the outer most edge of both the Nose Cone ballast system and the payload antenna is at least 1 inch when fully integrated.	**Measurement:** Measure the distance between the antenna and ballast system.	Verified	Payload Structural Integration	The distance between the antenna and ballast system is approximately 5 inches at the planned 0.46 lbs of ballast for the Huntsville launch. See Figure 4.8b for a physical representation.
PD.14	The payload SHALL have two pull pins externally accessible from the Nose Cone.	Two pull pins allow for the payload to be powered off until launch pad configuration. This reduces power expenditure prior to flight and allows for payload connection just prior to flight.	Two pull pins are incorporated into the payload electronics design and can be externally accessed.	**Inspection:** Two pull pins are shown in a manufactured assembly. **Inspection:** Pull pin locations are specified in circuit diagrams.	Verified	Payload Electronics	Two, externally accessible, pull pins are used in the payload design. See Figures 4.5b and 4.5a for the manufactured assembly and Section 4.5.2 for the wiring diagrams.
PD.15	The payload SHALL utilize two different batteries to distribute power evenly across all electronics.	Due to the power requirements of the multiple subsystems, two batteries are required to prevent the sensors from browning out due to excessive input power. The two circuits and batteries evenly distribute the power across all sensors with the help of a voltage regulator.	Two different power supplies are used in the payload electronics design.	**Inspection:** Verify the incorporation of two different battery sources via manufactured photos and wiring diagrams.	Verified	Payload Electronics	The payload uses a 2-cell 2200mAh and a 4-cell 2200mAh LiPo battery. See Section 4.5.2 for circuit diagrams of the two batteries.
PD.16	The max acceptable acceleration value SHALL be 300 m/s^2	This value was chosen based on expected acceleration forces during launch, including motor thrust and aerodynamic forces. It provides a safety margin above typical high-powered rocket accelerations while adhering to Requirement PF.15.	Payload software code defines a max acceptable acceleration value to be 300 m/s^2.	**Inspection:** Verify the inclusion of the max acceptable value in payload software.	Verified	Payload Software	The payload software has the max acceptable acceleration of 300 m/s^2 written and functionally working in the primary code.
PD.17	The max acceptable gyroscope value SHALL be 1000 rad/s.	This limit accounts for rapid spin rates that may occur due to aerodynamic instability or roll control mechanisms. It ensures the gyroscope can accurately track angular velocity without exceeding its measurement capacity and adheres to Requirement PF.15.	Payload software code defines a max acceptable gyroscope value to be 100 rad/s.	**Inspection:** Verify the inclusion of the max acceptable value in payload software.	Verified	Payload Software	The payload software has the max acceptable gyroscope value of 100 rad/s written and functionally working in the primary code.
PD.18	The max acceptable magnetometer value SHALL be 5000 uT.	This value was selected to ensure the magnetometer remains within its operational range while accounting for possible transient magnetic fields from onboard electronics and adheres to Requirement PF.15.	Payload software code defines a max acceptable magnetometer value to be 5000 uT.	**Inspection:** Verify the inclusion of the max acceptable value in payload software.	Verified	Payload Software	The payload software has the max acceptable magnetometer value of 5000 uT written and functionally working in the primary code.

Table 8.44: 2024-2025 Team-Derived Air Brake Requirements

Req. No.	Requirement Statement	Justification	Verification Success Criteria	Verification Method	Phase	Subsystem Allocation	Verification Results
PD.19	The max acceptable quaternion value SHALL be 100.	This constraint was set to prevent numerical instability in calculations and adhere to Requirement PF.15..	Payload software code defines a max acceptable quaternion value to be 100.	**Inspection:** Verify the inclusion of the max acceptable value in payload software.	Verified	Payload Software	The payload software has the max acceptable quaternion value of 100 written and functionally working in the primary code.
PD.20	The payload SHALL use two central computers.	Two central computers help to accomplish the processing required for the mission objective. One will be responsible for managing the FUSE Data Collection Subsystem (Section 4.3.3) and the other for processing the data to drive a finite state machine. Two separate computers allow for data to be streamlined, while ensuring the processing power of the primary CPU has minimal impact on sensor performance.	Two central computers are used in the software and electronic design for the payload.	**Inspection:** Verify two computers are configured in the payload via manufactured photos, software paths, and wiring diagrams.	Verified	Payload Electronics, Payload Software	Two central computers, the ESP32 and primary CPU, are used in the payload. See Section 4.3.3 for an overview of the sensors and electronic schematic.
PD.21	Crew survivability metrics SHALL be recorded (and data collected) after the coast state of the finite state machine.	Due to the nature of high-powered rocketry, its unlikely most human's would be capable of withstanding the 12G's of acceleration that are experienced off the rail and during the motor burn phase. To more accurately simulate human-like conditions, data will be recorded for this metric after the coast state.	Crew survivability metric and data collection occurs after the coast state via the finite state machine.	**Inspection:** The crew survivability data is explicitly coded in the payload software to begin after the coast state of the LV.	Verified	Payload Software	Crew survivability is not impacted by forces experienced prior to the coast state. See an overview of the payload and collected data in Section 4.3.3.
Safety Requirements							
PS.1	Only lead-free solder SHALL be used to minimize exposure to toxic substances.	Lead-free solder minimizes exposure to toxic lead fumes, reducing health risks for users and preventing environmental contamination. It aligns with regulatory standards and industry best practices for safer electronics manufacturing.	The team only purchases and utilizes lead-free solder for all solder applications.	**Inspection:** Inspect the team's budget purchases for lead-free solder.	Verified	Safety, Payload	The team only purchases lead-free solder. See Table 8.46 for the team's purchases and vendors.
PS.2	LiPo batteries SHALL be inspected for physical damage, swelling, or leakage prior to each use.	Inspecting LiPo batteries before each use helps prevent hazards such as fires, explosions, or electrical failures caused by damaged or compromised cells.	LiPo's are inspected prior to use and any damaged LiPo is properly disposed of.	**Inspection:** Inspect LiPo's prior to use.	Verified	Safety	LiPos are checked prior to every use. LiPo's are properly marked and labeled for their function within the LV.
PS.3	LiPo batteries shall be stored in a "LiPo Safe" or battery bag when not in use or being transported.	A "LiPo Safe" or battery bag reduces the risk of fires or thermal runaway. It ensures safer handling during storage and transportation, minimizing fire hazards in case of battery malfunction.	**(1)** Multiple LiPo Safe and battery bags are used for all batteries utilized in the LV and located in the lab. **(2)** LiPo's and batteries are transported to the launch field via a battery bag or LiPo Safe.	**Inspection:** Verify LiPos are stored and transported in a LiPo Safe or battery bag. Verify either method is included in the pre-launch packing checklist.	Verified	Safety, Project Management	LiPos are stored in designated battery/LiPo bags. These storage bags are listed in the pre-launch packing checklist (Section 9.1.2).

Table 8.44: 2024-2025 Team-Derived Air Brake Requirements

Req. No.	Requirement Statement	Justification	Verification Success Criteria	Verification Method	Phase	Subsystem Allocation	Verification Results
Environmental Requirements							
PE.1	Used electronic components SHALL be placed in designated electronic waste bins.	Proper disposal of electronic components prevents hazardous materials, such as heavy metals and toxic chemicals, from contaminating the environment. Designated electronic waste bins ensure safe handling, regulatory compliance, and facilitate recycling or proper disposal of e-waste.	**(1)** A designated bin is marked and labeled near the avionics bench in the team's lab space. **(2)** Team member's follow the Wake County Waste Disposal Guidelines to dispose of electronic waste.	**Inspection:** An electronic waste bin is marked and present at the team's avionics bench.	Verified	Safety	**(1)** The team has a designated and labeled container for electronic waste by the avionics lab bench. **(2)** Team members follow the Wake County Waste Disposal Guidelines established in Appendix 9.4.

Table 8.45: 2024-2025 Team-Derived Air Brake Requirements

Req No.	Requirement Statement	Justification	Verification Success Criteria	Verification Method	Phase	Subsystem Allocation	Verification Results
Functional Requirements							
ABF. 1	The Air Brake fins SHALL be able to withstand the calculated force of drag at the furthest external point of the fins.	The maximum drag force exerted on the rocket is calculated to be 70 lbs. A point load on the furthest part of the external Air Brake fins represents the highest moment load the Air Brake design can have. Verifying proper movement during this max load / max moment load allows for increased confidence in Air Brake deployment during flight.	Air Brake fins are tested to withstand 1.5 times the approximated value of drag.	**(1) Analysis:** Simulations and previous flight data is used to determine an approximate value of drag for this rocket configuration and motor selection. **(2) Test:** A loading test is performed with 1.5 times the estimated drag as the primary load factor.	Verified	Payload Team	**(1)** See Section 3.7.2 for current full-scale drag analysis. The maximum calculated drag on the Air Brake system is 70 lbs. **(2)** See Section 8.2.13 for weighted Air Brake deployment test results. The test was successful and the finalized design can handle 70 lbs.
ABF. 2	The Air Brake fins SHALL deploy at the same time, symmetrically.	Asymmetric deployment of the Air Brake system can create unbalanced forces that could reduce LV stability and impact its trajectory. Additionally, symmetric deployment reduces complexity in the design software and electronic fabrication. Reducing the number of different moving parts, reduces the the probability of software error.	**(1)** All Air Brakes fins deploy at the same time. **(2)** Internal gears do not slip or break during deployment.	**(1) Demonstration:** Analyze post launch data to ensure the Launch Vehicle remained stable throughout flight. **(2) Demonstration:** Inspect the gearing system post launch to verify no gears are broken or misaligned.	Verified	Payload Team	**(1) & (2)** See Section 8.2.15 for the Air Brake Effectiveness Flight Test. This test demonstrates the ability of the Staggered Air Brake module to reduce altitude by greater than 200 ft without gear breakage.
ABF. 3	The Air Brakes module SHALL be fixed to the airframe by four external screws.	Securing the Air Brakes module to the airframe ensures that the module does not shift during operation. Thus preventing the misalignment that could result in the fins rubbing against the airframe, preventing deployment, and stalling the servo.	Air Brake module is secured to airframe by 4 external screws.	**(1) Inspection:** Verify the design of the Air Brakes module has more than one connection point ot the airframe. **(2) Demonstration:** Verify proper deployment of the Air Brake fins and confirm that the Air Brake module did not shift during flight.	Verified	Payload Team	**(1)** See Section 5.7 and Figure 5.1 for manufactured and assembled AVAB Bay with Air Brake module external connection screws. **(2)** The Air Brake module remained intact and secured during the entirety of the VDF flight. See Figure 6.4b for AVAB Bay recovery photos.

Table 8.45: 2024-2025 Team-Derived Air Brake Requirements

Req. No.	Requirement Statement	Justification	Verification Success Criteria	Verification Method	Phase	Subsystem Allocation	Verification Results
ABF. 4	The apogee prediction algorithm and control system SHALL have a combined simulated accuracy within 50 feet of the target altitude.	To maximize altitude points, the rocket needs to get as close to the target altitude as possible. Thus, having an error of 50 feet reduces the amount of points retained.	The apogee prediction algorithm produces an altitude within 50 ft of the target altitude when running old flight data.	**Test:** Run previous flight data through the apogee prediction algorithm and verify that the simulated apogee is within 50 feet of the target apogee.	Verified	Payload Team	An Air Brake Flight Simulation Test was performed in Section 8.2.14. The algorithm resulted in an apogee within 2% of the target altitude from previous flight data.
ABF. 5	The Air Brake fin deployment SHALL be tested prior to flight, after AVAB integration, during launch day assembly.	Testing the fin deployment ensures proper functionality and alignment of the Air Brakes system after integration into the AVAB Bay. It mitigates the risk of deployment failure due to assembly errors.	**(1)** Air Brake module is integrated into AVAB Bay and the fins undergo a deployment test during launch day assembly. **(2)** Air Brake fins have full clearance during deployment test and remain clear of the external airframe.	**(1) Inspection:** Verify that the Air Brake fin slots align with the slots in the AVAB Bay. **(2) Demonstration:** During Launch Day Checklist, Air Brakes are tested and they fully deploy with no interference from the fin slots or airframe.	Verified	Payload Team	See Launch Day Checklist Item 1.62 in Section 7.2 for deployment test prior to flight.
Design Requirements							
ABD.1	The Air Brake fin slots SHALL be located aft of the center of gravity of the launch vehicle after motor burnout.	As required by NASA Requirement 2.16, all protrusions have to be aft of the center of gravity. Therefore, Air Brakes must be located aft of the center of gravity.	**(1)** Air Brake fin slots are aft of motor burnout CG in simulations with a margin of >0.75 inches. **(2)** The night before launch checklist confirms that the burnout center of gravity (CG) is positioned forward of the Air Brake fin slots, with the launch vehicle (LV) weighted to simulate burnout conditions.	**(1) Measurement:** Measure the location of the Air Brake fins slots relative to the burnout CG in RocketPy. **(2) Demonstration:** Simulate the motor burnout LV weight and verify that the Air Brake fin slots are aft of the CG.	Verified	Aerodynamics, Payload Team	**(1)** The Air Brake fin slots are 2 inches aft of the burnout CG in RocketPy. See Figure 3.95 for the burnout CG location. **(2)** The Air Brake fin slots are aft of the burnout CG in the manufactured LV (See Figure 3.95).
ABD.2	The Air Brake system SHALL consist of four identical fins that are equally spaced around the body of the rocket.	Four fins increases the aerodynamic drag of the entire rocket.	**(1)** Fins are symmetric. **(2)** Fins are evenly spaced around body tube.	**(1) Inspection:** Verify symmetric design. **(2) Inspection:** Verify fins are evenly spaced in Air Brake design.	Verified	Payload Team	The Air Brake fins are symmetric and evenly spaced. See Figure 5.5 for the manufactured Air Brake module design.
ABD.3	Two pull-pin switches SHALL be used to arm the Air Brakes system.	To prevent idle power consumption prior to flight, the Air Brakes power systems should not be armed until the rocket is on the launch pad. The two pull-pin switches each individually arm the two power circuits as mentioned in Requirement ABD.5.	Two pull-pin switches are included in Air Brakes design.	**Inspection:** Confirm two pull-pin switches are included in Air Brakes design in CDR documentation.	Verified	Payload Team	See Section 5.3.2 for the Air Brakes electronic schematic.
ABD.4	The Air Brake control system software SHALL be state-based.	A state-based software model separates the coding functions based on various stages of flight and reduces Air Brake failure and accidental deployment. This verifies that the Air Brake fins will only deploy during the ”coast” phase of the vehicle, after motor burnout; further verifying NASA Requirement 2.16.	**(1)** Air Brakes software is a state-based model. **(2)** Multiple states are included in software (Standby, Motor burn, Coast, etc.)	**(1) Inspection:** Confirm Air Brakes software discussed in CDR documentation is a state-based model. **(2) Review:** Review discussion of software ”states” in CDR documentation.	Verified	Payload Team	**(1)** The Air Brake software states are standby, motor burn, coast, and free fall. This is discussed in CDR and FRR. **(2)** See Section 5.6 for the discussed state’s of the Air Brake software.

8.4 Budget

Table 8.46 details the year-long budget for the 2024 - 2025 competition year. The table is organized in columns of Item, Vendor, Quantity, Price Per Unit, and Total Item Price. A subtotal of the spending of each subsystem is highlighted in light gray at the end of each section. Subsequently, the total expenses of the club throughout the year is highlighted in dark gray at the end of the budget section. All prices are based on this years club spending on the Subscale and Full-scale rockets, as well as the travel spending for Huntsville. General items are categorized appropriately, such as nuts, screws, and bolts, all included in the same category rather than separately.

Table 8.46: 2024-2025 NASA Student Launch Competition Budget

	Item	Vendor	Quantity	Price Per Unit	Item Total
Subscale Structure	4 in. Nose cone	ARR	1	$ 27.75	$ 27.75
	4 in. Airframe	ARR	2	$ 39.95	$ 79.90
	Airframe-Nose cone Transition	ARR	1	$ 27.75	$ 27.75
	Subscale Motor	AeroTech	2	$ 95.99	$ 191.98
	38mm Motor Retainer	AeroTech	1	$ 39.17	$ 39.17
	Motor Casing	AeroTech	1	$ 98.86	$ 98.86
	Rail Button	Rail-Buttons	2	$ 4.25	$ 8.50
	Fiberglass Fins	Apogee Rockets	4	$ 16.50	$ 66.00
	U-Bolts	Prime Line	4	$ 1.50	$ 6.00
	Nuts, Screws, Eyebolts	McMaster-Carr	1	$ 12.71	$ 7.08
				Subtotal:	**$ 552.99**
Full-Scale Structure	6 in. Nose cone 4:1	Wildman Rocketry	1	$ 199.99	$ 199.99
	6 in. G12 Fiberglass Tube (60 in.)	Wildman Rocketry	1	$ 259.00	$ 259.00
	6 in. G12 Fiberglass Tube (48 in.)	Wildman Rocketry	1	$ 207.20	$ 207.20
	6 in. G12 Fiberglass Coupler	Wildman Rocketry	1	$ 94.60	$ 94.60
	Full-scale Motor	AeroTech	2	$ 272.68	$ 545.36
	Motor Retainer	AeroTech	1	$ 59.50	$ 59.50
	Large Rail Button -1515	Apogee Rockets	2	$ 4.25	$ 8.50
	U-Bolts	Prime Line	8	$ 1.00	$ 8.00
	32mm Bore	goBILDA	2	$ 12.99	$ 25.98
	Double Pull Pin Switch	Apogee Rockets	1	$ 20.35	$ 20.35
				Subtotal:	**$ 1,428.28**
Payload	Barometric Pressure Sensor	Adafruit	2	$ 12.95	$ 25.90
	Temp & Humidity Sensor	Adafruit	1	$ 119.99	$ 119.99
	Inertial Measurement Unit	Adafruit	2	$ 39.95	$ 79.90
	Raspberry Pi 4B	Adafruit	4	$ 67.95	$ 67.95
	Buck Converter	HiLetGo	2	$ 4.95	$ 9.90
	Antenna	Pizarra	1	$ 69.99	$ 69.99
	Breakout Boards	ICBreakout	2	$ 5.95	$ 11.90
	Handheld Radio	BAOFENG	1	$ 39.99	$ 39.99
	SI4464	Silicon Labs	2	$ 9.43	$ 18.86
	LiPo Battery	Adafruit	2	$ 33.85	$ 67.70
	DS2685BLDP Servo Arm	ProModeler	1	$ 229.99	$ 229.99
	PLA Filament	AMOLEN	4	$ 14.99	$ 59.96
	PETG Filament	AMOLEN	4	$ 16.99	$ 67.96
	Payload Structural Materials	Etc	1	$ 70.01	$ 70.01
	Nuts, Screws, Eyebolts	McMaster-Carr	1	$ 12.71	$ 7.08
	Soldering Station	Pine Store	1	$ 165.00	$ 165.00
				Subtotal:	**$ 1,102.08**

Table 8.46: 2024-2025 NASA Student Launch Competition Budget

	Item	Vendor	Quantity	Price Per Unit	Item Total
Recovery	120 in. Standard Parachute	Fruity Chutes	1	$ 313.37	$ 313.37
	18 in. Elliptical Parachute	Fruity Chutes	2	$ 80.95	$ 161.90
	Eggfinder Mini Transmitter	Eggtimer Inside	1	$ 105.00	$ 105.00
	Eggfinder LCD Receiver	Eggtimer Inside	1	$ 85.00	$ 85.00
	Altus Metrum Altimeter	Eggtimer Inside	2	$ 85.00	$ 170.00
	6 in. Deployment Bag	Fruity Chutes	1	$ 54.40	$ 54.40
	4 in. Deployment Bag	Fruity Chutes	1	$ 47.30	$ 47.30
	18 in. Cloth	Nomex	1	$ 26.40	$ 26.40
	13 in. Cloth	Nomex	1	$ 17.60	$ 17.60
	Quick Links	Huyett	18	$ 6.98	$ 125.64
	Electric Match	Firewire	50	$ 2.00	$ 100.00
	Ejection Charge	AeroTech	24	$ 1.25	$ 30.00
	Small Nylon Shear Pins	Essentra	40	$ 0.18	$ 7.20
				Subtotal:	**$ 1,243.81**
Miscellaneous	Paint	Krylon	4	$ 10.00	$ 40.00
	Birch Plywood 1/8 in.x2x2n	Rockler	6	$ 14.82	$ 88.92
	105 Epoxy Resin	West Systems	1	$ 109.99	$ 109.99
	206 Slow Hardener	West Systems	1	$ 62.99	$ 62.99
	Filament Spool	Atomic Filament	1	$ 26.00	$ 26.00
	Double Pull Pin Switch	IPL	4	$ 11.95	$ 47.80
	USB-C Cables	Belkin	2	$ 8.99	$ 17.98
	Wood Glue	Gorilla	1	$ 7.98	$ 7.98
	Misc. Bolts	Everbilt	1	$ 20.00	$ 20.00
	Misc. Nuts	Everbilt	1	$ 10.00	$ 10.00
	Misc. Washers	Everbilt	1	$ 8.00	$ 8.00
	Tinned Copper Wire Kit	DX Engineering	1	$ 12.00	$ 12.00
	Zip Ties Pack	HMRope	1	$ 6.59	$ 6.59
	Misc. Tape	Scotch	1	$ 20.00	$ 20.00
	Safety Supplies	Equate	1	$ 5.00	$ 5.00
	Estimated Shipping				$ 1,000.00
	Incidentals (replacement tools, hardware, safety equipment, etc.)				$ 500.00
				Subtotal:	**$ 1,983.25**
Travel	Student Hotel Rooms – 4 nights	Hilton Hotels	7	$ 1000.00	$ 7,000.00
	Mentor Hotel Rooms – 4 nights	Hilton Hotels	2	$ 1250.00	$ 2,500.00
	NCSU Van Rental (# Vans)	NCSU	3	$ 500.00	$ 1,500.00
				Subtotal:	**$ 11,000.00**
				Total Expenses:	**$ 17,310.41**

It is important to note that many of the general items from previous documents (Proposal, PDR, CDR) added up to similar totals as predicted, while other expenditure changed drastically. In addition, there were many vendor changes from our previous milestone reports. Most notably, we initially planned on ordering our Full-Scale parts from Performance Hobbies, however, we switched to Wildman Rocketry due to shipping delays and contact difficulty. It is also important to note that the number and price of hotel rooms changed, which was due to final selections of Huntsville attendees. Overall, this added up to about a $3000 reduction in total expenses. An updated budget breakdown is shown below in Figure 8.33.

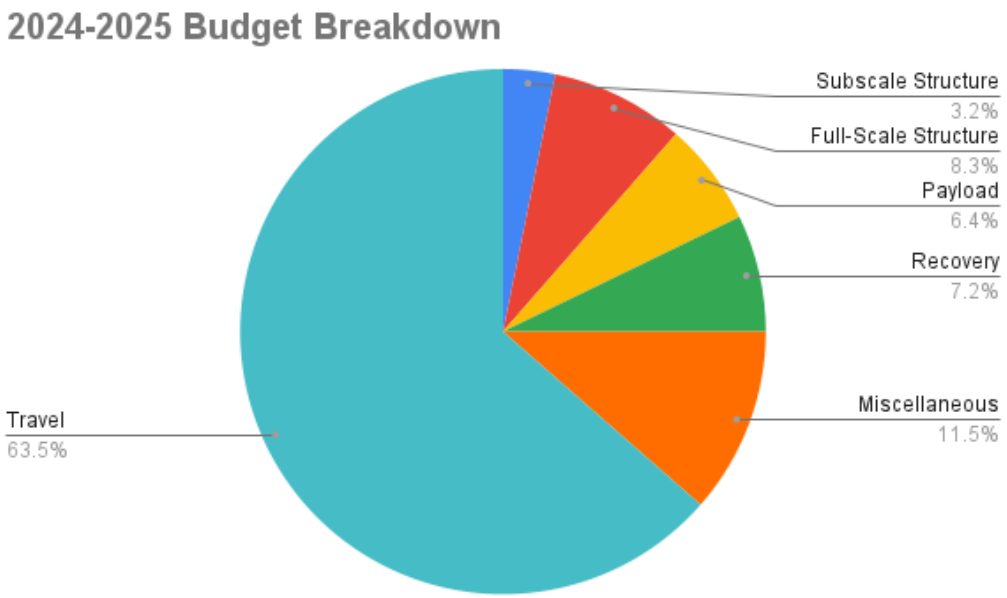

Figure 8.33: 2024-2025 Budget Breakdown.

8.4.1 Funding Plan

HPRC is supported by various funding sources from NC State University and the North Carolina Space Grant (NCSG). The following sections provides a detailed overview of each funding source and the specific allocations from each.

The NC State Student Government Association (SGA) allocates funds to over 600 campus clubs and organizations, including HPRC. At the beginning of each semester, clubs submit applications detailing their expected expenses. After submission, the clubs participate in a brief 15-minute interview with SGA representatives to discuss their activities, clarify budget specifics, and explain the value they provided to the university. Following this, the SGA allocates funds to each organization. For the 2023-2024 academic year, HPRC received $1,592.00 from SGA: $796.00 in the fall semester and $796.00 in the spring semester. For the current academic year, we requested $1,800 for the fall semester and $1,800 for the spring semester. Despite this request, we only received $796 for the Fall semester and $596 for the spring semester. This is very unusual, especially considering our well prepared delivery of funding requests and the fact that we have gotten over $700 in most semesters in the past. This is likely due to the fact that in semesters past Student Government had over $500,000 to give to all organizations, where as this past cycle they only had $150,000 to give out. This essentially means that the club going to have to find other sources of funding for our Subscale rocket, likely meaning finding some sort of sponsorship or borrowing money from ETF funds. In the fall, the student government funds are typically used primarily for the Subscale rocket, leaving little for backup parts or Full-scale materials. In the spring, SGA funds will be used for any necessary items, as long as all expenses are tracked with receipts.

NC State's College of Engineering Enhancement Funds, provided through the "Engineer Your Experience" (EYE) department, support extracurricular activities, particularly those related to travel. EYE will fully cover student travel costs to Huntsville. Based on the expenses from previous years for this trip, it is estimated that HPRC will receive around $8,000 for travel expenses this year.

The Educational and Technology Fee (ETF) is an NC State fund allocated for academic enhancement through student organizations. For the 2023-2024 academic year, HPRC received $2,500 from ETF, and the same amount is expected for this year. This funding is specifically designated for the travel and hotel expenses of the team's faculty advisors for the Huntsville trip. That being said, as mentioned in the Student Government section, some of these funds may need to be accessed at the beginning of the year in order to properly fund next years Subscale rocket.

In addition to funding from various NC State University sources, the North Carolina Space Grant (NCSG) is a significant contributor to HPRC's funding. The NCSG accepts funding proposals in the fall semester, with teams able to request up to $5,000 for participation in NASA competitions. After reviewing the submitted proposals, they notify the club of the awarded amount. In previous years, we received the maximum amount of $5,000, which will be available starting in November 2024. We are expected to receive the full $5,000 again this year, as in previous years. Requesting club items through Space Grant can be done in one of two ways. The first method involves using the MAE request form, where items are submitted for approval by the club advisor. Once approved, the items are ordered directly from the vendor. The second method is through the NC State Marketplace, which allows items to be ordered from

a list of approved vendors using Space Grant funds, directly from the vendors' websites. Marketplace access is restricted to graduate students, so the treasurer typically collaborates with a graduate student in the club to place orders using their Marketplace access. While Marketplace is generally preferred due to its faster processing, it is limited by both its vendor selection and access restrictions for graduate students. As a result, both the Marketplace and MAE Purchase Request forms are used to order club items.

A summary of all these totals is provided in Table 8.47 below, which outlines the costs and revenue for the 2024-2025 academic year.

Table 8.47: Projected Funding Sources

Organization	Fall Semester	Spring Semester	Academic Year
NC State Student Government	$796	$596	$1,392
North Carolina Space Grant	$5,000	$0	$5,000
Engineer Your Experience	$0	$8,500	$8,500
Educational and Technology Fee	$0	$2,500	$2,500
Total Funding:			**$17,392.00**
Total Expenses:			**$17,310.41**
Difference:			**$81.59**

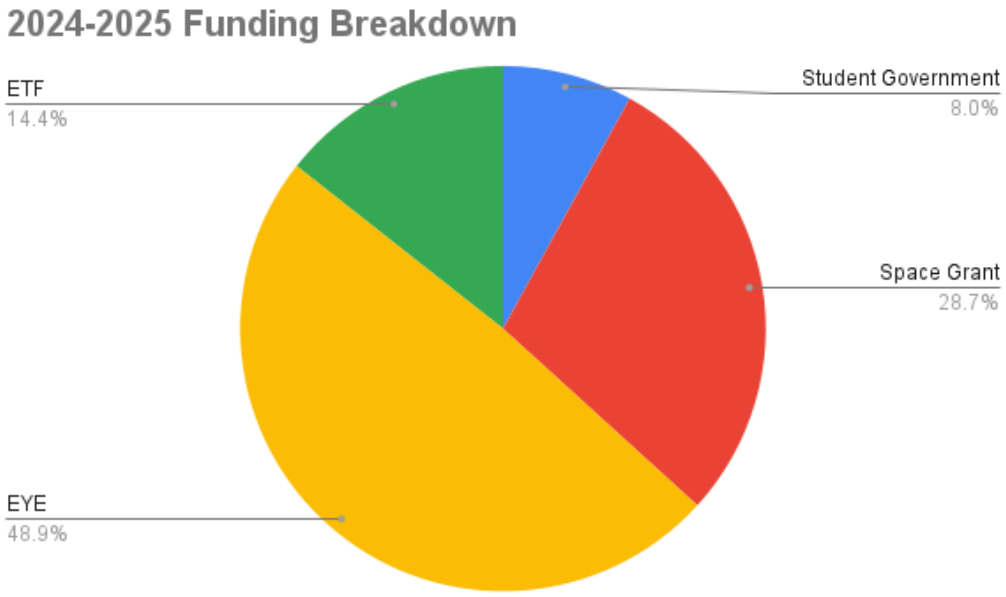

Figure 8.34: 2024-2025 Funding Breakdown.

8.5 Project Timelines

8.5.1 Competition Deliverables

Table 8.48: Competition Deadlines

Event/Task	Deadline/ Date
Request for Proposal Released	August 14, 2024
Proposal Submission Due	September 11, 2024
Awarded Proposals Announced	October 3, 2024
PDR Q&A	October 7, 2024
PDR Submission Due	October 28, 2024
PDR Video Teleconference	November 8, 2024
Gateway Registration Due	November 29, 2024
CDR Q&A	December 3, 2024
Huntsville Rosters Due	December 16, 2024
Subscale Flight Due	January 8, 2025
CDR Submission Due	January 8, 2025
CDR Video Teleconferences	January 23, 2025

Table 8.48: Competition Deadlines

Event/Task	Deadline/ Date
Team Photos Due	February 10, 2025
FRR Q&A	February 11, 2025
VDF Due	March 17, 2025
FRR Submission Due	March 17, 2025
FRR Video Teleconferences	March 28, 2025
PDF Due	April 14, 2025
VDF Re-flight Due	April 14, 2025
FRR Addendum Due	April 14, 2025
Launch Week Q&A	April 17, 2025
Arrival in Huntsville	April 30, 2025
LRR and Payload Testing	April 30 - May 1, 2025
Welcome Ceremony	May 1, 2025
Punch List Checks	May 2, 2025
Rocket Fair	May 2, 2025
Launch Day	May 3, 2025
Backup Launch Day	May 4, 2025
PLAR Submission Due	May 19, 2025

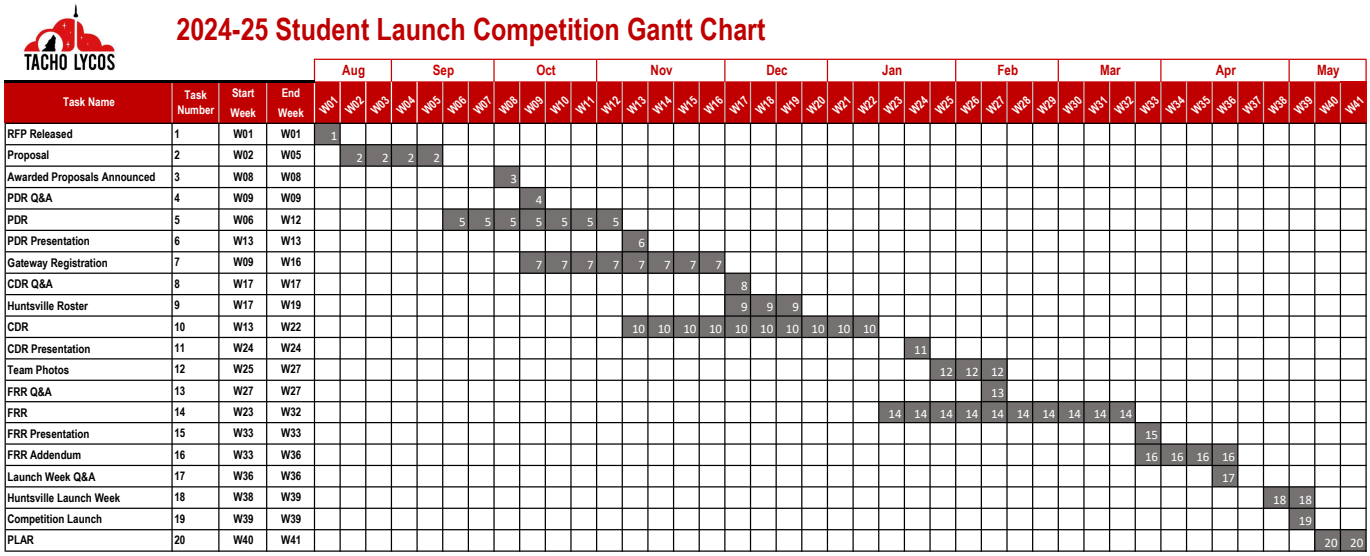

Figure 8.35: SL Competition Gantt chart.

8.5.2 Competition Development Timelines

Table 8.49 outlines the weekly club meetings to ensure successful completion of the competition. Launch activities take place on Saturdays and Sundays, depending on the availability of the launch field and weather conditions. To ensure readiness for launch day, dry run, ejection testing, and packing are typically conducted on the Friday before launch. Vehicle meetings are joint meetings between the structures, recovery, and aerodynamics subsystems to collaborate on launch vehicle and recovery system development. Payload meetings include all payload subsystem leads and Air Brakes personnel, focusing on both the development of the competition and experimental payload. Integration meetings combine vehicle and payload subsystems to review measurements, discuss design changes, and provide development updates. General body meetings provide updates from all subsystems to the entire club, and communicate essential information about the competition to club members. Officer meetings focus on club organization and management. And finally, wolfworks meetings are used for further development of club-wide experimental projects that are used to develop the club's knowledge and involve new members.

Table 8.49: Weekly Club Schedule

Sunday	7:00 am - 7:00 pm: Launch Day Activities
Monday	3:00 - 4:00 pm: Wolfworks Experimental Meeting 4:30 - 5:30 pm: Vehicle Meeting
Tuesday	3:00 - 4:00 pm: Wolfworks Experimental Meeting
Wednesday	4:30 - 5:30 pm: Vehicle Meeting
Thursday	12:00 - 2:00 pm: Payload Meeting 4:30 - 7:15 pm: Integration Meeting 7:30 - 8:30 pm: General Body Meeting
Friday	9:00 - 10:00 pm: Wolfworks Experimental Meeting 12:00 - 8:00 pm: Launch Day Packing
Saturday	7:00 am - 7:00 pm: Launch Day Activities

TACHO LYCOS

2024-25 Student Launch Competition Development Gantt Chart

				Aug			Sep				Oct				Nov					Dec				Jan				Feb				Mar				Apr				May		
Task Name	Task Number	Start Week	End Week	W01	W02	W03	W04	W05	W06	W07	W08	W09	W10	W11	W12	W13	W14	W15	W16	W17	W18	W19	W20	W21	W22	W23	W24	W25	W26	W27	W28	W29	W30	W31	W32	W33	W34	W35	W36	W37	W38	W39	W40	W41
Brainstorming	1	W01	W05	1	1	1	1	1																																		
Vehicle Design	2	W04	W06				2	2	2																																		
Payload Design	3	W05	W14					3	3	3	3	3	3	3	3	3	3																										
Subscale Parts Ordering	4	W06	W07						4	4																																		
Subscale Manufacturing	5	W08	W12								5	5	5	5	5																												
Subscale Component Testing	6	W08	W12								6	6	6	6	6																												
Subscale Ejection Testing	7	W10	W10										7																														
Subscale Painting	8	W11	W11											8																													
Subscale Launch	9	W12	W12												9																												
Full-scale Parts Ordering	10	W14	W21														10	10	10	10	10	10	10	10																			
Payload Parts Ordering	11	W15	W21															11	11	11	11	11	11	11																			
Full-scale Manufacturing	12	W22	W26																						12	12	12	12	12														
Payload Manufacturing	13	W12	W28												13	13	13	13	13	13	13	13	13	13	13	13	13	13	13	13	13											
Full-scale Component Testing	14	W27	W28																											14	14											
Recovery System Testing	15	W26	W29																										15	15	15	15										
Payload Testing	16	W27	W30																											16	16	16	16									
VDF Launch	17	W30	W30																														17									
PDF Launch	18	W30	W30																														18									
Full-scale Painting	19	W32	W36																																19	19	19	19	19				
Competition Launch	20	W38	W39																																					20	20		

Figure 8.36: SL Development Gantt chart.

Competition Development PERT Charts

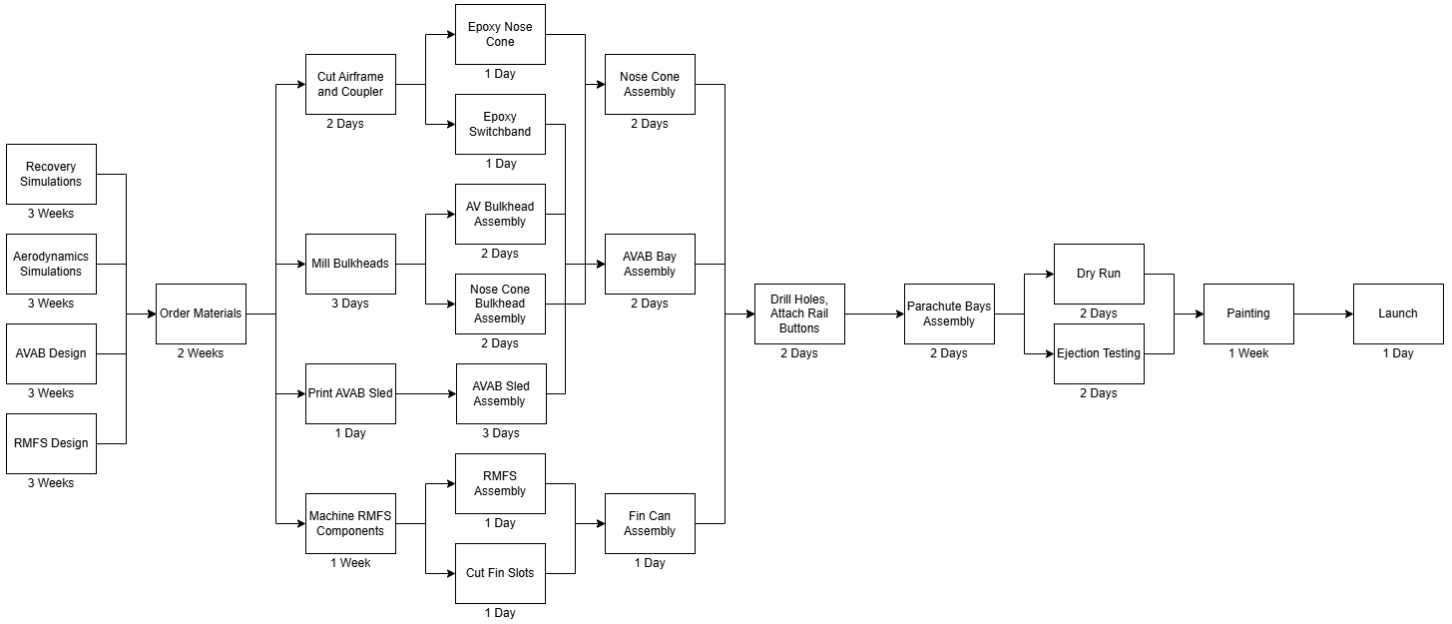

Figure 8.37: Full-scale Launch Vehicle PERT chart.

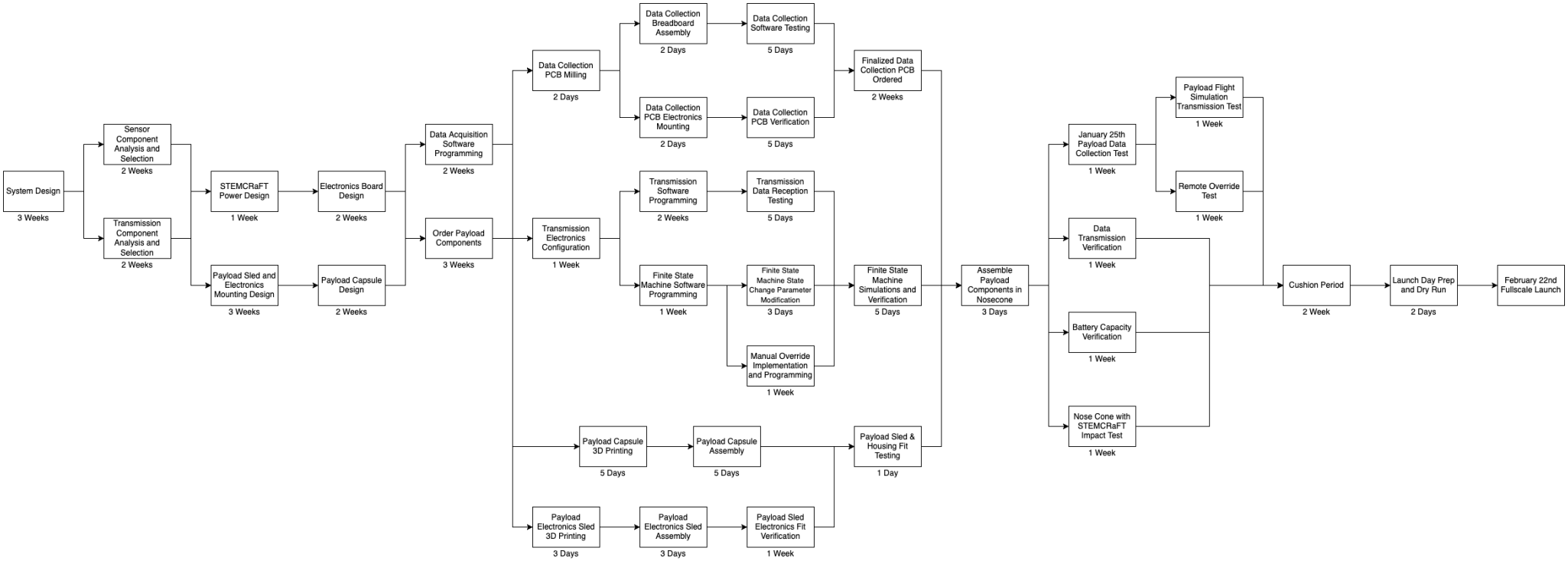

Figure 8.38: Payload PERT chart.

Project Management Timeline

Table 8.50: 2024-2025 Project Management Timeline

January						
Sunday	Monday	Tuesday	Wednesday	Thursday	Friday	Saturday
			1 • CDR soft deadline	2	3	4
5	6 • First day of class	7	8 • CDR due • Subsclae flight due	9 • Set up FRR document	10	11
12	13	14	15	16	17	18
19	20 • MLK Day	21	22	23 • CDR presentation	24	25
26	27	28	29	30 • Determine date of team photos	31	
February						
Sunday	Monday	Tuesday	Wednesday	Thursday	Friday	Saturday
						1
2	3	4	5 • Write checklist	6 • Write checklist	7 • Write checklist	8 • Write checklist
9	10 • Team photos due • Write checklist	11 • No class • FRR Q&A • Write checklist	12 • Finalize checklist	13	14 • Full-scale dry run • Full-scale ejection testing	15
16	17	18	19	20	21 • Full-scale packing	22 • VDF/ PDF flight Attempt 1
23	24	25	26	27	28	
March						
Sunday	Monday	Tuesday	Wednesday	Thursday	Friday	Saturday
						1
2	3	4	5	6	7 • Full-scale packing	8 • VDF/ PDF flight Attempt 2
9	10 • FRR soft deadline • Spring Break	11 • Spring Break	12 • Spring Break	13 • Spring Break	14 • Spring Break	15
16	17 • FRR due • Painting • VDF due	18 • Set up FRR addendum document • Painting	19 • Painting	20 • Painting	21 • Painting	22
23	24	25	26	27	28	29

Table 8.50: 2024-2025 Project Management Timeline

	• Painting	• Painting	• Painting	• Painting	• Backup packing	• Backup PDF flight • Backup VDF reflight
30	31 • Painting					
April						
Sunday	Monday	Tuesday	Wednesday	Thursday	Friday	Saturday
		1 • Painting	2 • Painting	3 • Painting	4 • Painting	5
6	7 • Painting	8 • Painting	9 • FRR addendum soft deadline • Painting	10 • Painting	11 • Painting	12
13	14 • FRR addendum due • PDF due • VDF reflight due • Painting Finalized	15 • Set up PLAR document	16 • Huntsville dry run • Huntsville ejection testing	17 • Launch week Q&A	18 • Huntsville ejection testing • Huntsville dry run	19
20	21	22 • Last day of class	23	24 • Finals	25 • Finals	26
27	28 • Finals • Huntsville packing	29 • Finals • Huntsville packing	30 • Finals • Travel to Huntsville			
May						
Sunday	Monday	Tuesday	Wednesday	Thursday	Friday	Saturday
				1 • Huntsville activities • Senior graduation • Seniors travel to Huntsville	2 • Huntsville activities	3 • Launch Day
4 • Backup Launch Day • Travel from Huntsville	5	6	7	8	9	10
11	12	13	14	15 • PLAR soft deadline	16	17
18	19 • PLAR due	20	21	22	23	24
25	26	27	28	29	30	31

8.5.3 Verification Testing Timeline

2024-25 Verification Testing Gantt Chart

Task Name	Task Number	Start Week	End Week	Nov					Dec				Jan					Feb				Mar			
				W12	W13	W14	W15	W16	W17	W18	W19	W20	W21	W22	W23	W24	W25	W26	W27	W28	W29	W30	W31	W32	W33
Subscale Ejection Test	1	W14	W14			1																			
Subscale Dry Run	2	W14	W14			2																			
Subscale Demonstration Flight	3	W14	W14			3																			
WARHEAD Data Collection Test	4	W24	W24													4									
Air Brakes Effectiveness Flight Test	5	W24	W24													5									
GPS Test	6	W25	W25														6								
Air Brakes Flight Simulation Test	7	W25	W25														7								
Nose Cone Bulkhead Tensile Test	8	W27	W27																8						
AVAB Bay Tensile Test	9	W27	W27																9						
Rivet Shear Loading Test	10	W27	W27																10						
Moment of Inertia Test	11	W28	W28																	11					
Shear Pin Shear Loading Test	12	W28	W28																	12					
Fin Can Impact Test	13	W28	W28																	13					
WARHEAD Transmission Range Test	14	W28	W28																	14					
WARHEAD Antenna Polarization Test	15	W28	W28																	15					
WARHEAD FUSE Data Collection Frequency Test	16	W28	W28																	16					
WARHEAD Remote Override Range Test	17	W28	W28																	17					
WARHEAD Vacuum Chamber Test	18	W28	W28																	18					
Nose Cone with STEMCRAFT Drop Test	19	W28	W28																	19					
Air Brakes Deployment Test	20	W28	W28																	20					
Parachute Deployment Verification	21	W28	W29																	21	21				
Altimeter Test	22	W29	W29																		22				
WARHEAD Simulated Flight Transmission Test	23	W29	W29																		23				
WARHEAD Remote Override Test	24	W29	W29																		24				
Full-scale Demonstration Flight	25	W30	W30																			25			
WARHEAD Data Transmission Verification	26	W30	W30																			26			
WARHEAD Power Supply Verification	27	W30	W30																			27			
Camera Logging Endurance Test	28	W30	W30																			28			
Air Brakes Battery Life Test	29	W30	W30																			29			

Figure 8.39: SL testing Gantt chart.

8.5.4 Funding Timeline

2024-25 Competition Funding Gantt Chart

Task Name	Task Number	Start Week	End Week	Aug			Sep				Oct				Nov					Dec			Jan				Feb				Mar				Apr				May			
				W01	W02	W03	W04	W05	W06	W07	W08	W09	W10	W11	W12	W13	W14	W15	W16	W17	W18	W19	W20	W21	W22	W23	W24	W25	W26	W27	W28	W29	W30	W31	W32	W33	W34	W35	W36	W37	W38	W39	W40
E Council S24-F24	1	W01	W06	1	1	1	1	1	1																																
Student Government S24-F24	2	W01	W14	2	2	2	2	2	2	2	2	2	2	2	2	2	2																								
E Council F24-S25	3	W10	W29										3	3	3	3	3	3	3	3	3	3	3	3	3	3	3	3	3	3	3	3									
Student Government F24-S25	4	W10	W30										4	4	4	4	4	4	4	4	4	4	4	4	4	4	4	4	4	4	4	4	4	4							
Space Grant 2023-2025	5	W12	W40												5	5	5	5	5	5	5	5	5	5	5	5	5	5	5	5	5	5	5	5	5	5	5	5	5	5	5
EYE Funding	6	W24	W24																							6															
ETF Funding	7	W24	W24																							7															

Figure 8.40: SL Budget Gantt chart.

References

[1] 18" Elliptical Parachute - 1.2lb at 20fps. URL: https://shop.fruitychutes.com/collections/classic-elliptical-12-to-60/products/18-elliptical-parachute-1-2-lb-20fps.
[2] 6 Inch G12 Fiberglass Tube. URL: https://www.compositewarehouse.com/index.php?route=product/product&path=25_28_35&product_id=68.
[3] Adafruit 9-DOF Accel/Mag/Gyro+Temp Breakout Board - LSM9DS1. URL: https://www.adafruit.com/product/3387.
[4] ADS1115 16-Bit ADC - 4 Channel with Programmable Gain Amplifier - STEMMA QT / Qwiic. URL: https://www.adafruit.com/product/1085.
[5] AeroTech L1390G Motor Data. URL: https://www.thrustcurve.org/motors/AeroTech/L1390G/.
[6] AeroTech L1520T Motor Data. URL: https://www.thrustcurve.org/motors/AeroTech/L1520T/.
[7] AeroTech L850W. URL: https://www.thrustcurve.org/motors/AeroTech/L850W/.
[8] Aerotech RMS-75/3840. URL: https://www.apogeerockets.com/Rocket-Motors/AeroTech-Casings/75mm/RMS-75-3840-Casing.
[9] AIOC - Ham Radio All-in-one-Cable. URL: https://na6d.com/products/aioc-ham-radio-all-in-one-cable.
[10] Barrowman Equations. URL: https://www.rocketmime.com/rockets/Barrowman.html.
[11] Blue Tube 2.0. URL: https://alwaysreadyrocketry.com/blue-tube-2-0/.
[12] BNO085. URL: https://www.digikey.com/en/products/detail/ceva-technologies-inc/BNO085/9445940.
[13] Justyn Bunkley. "Design Analysis of Rocket Tail Fins Aimed at Higher Apogee by Computer Simulation". In: American Society For Engineering Education (Apr. 2022).
[14] Compression Tests of Tubing Used In Rocketry. URL: https://www.apogeerockets.com/Peak-of-Flight/Newsletter510.
[15] Digi XBee-PRO® XSC S3/S3B Long-Range RF Modules. URL: https://www.mouser.com/new/digi-international/digi-xbee-pro-xsc-s3-s3b-modules/.
[16] Direwolf Software. URL: https://github.com/wb2osz/direwolf.
[17] Double Pull Pin Switch Kit - LRR. URL: https://inverted-pursuits-lab.square.site/product/DoublePullPinSwitch/44?cp=true&sa=false&sbp=false&q=false&category_id=10.
[18] DPS310. URL: https://www.infineon.com/cms/en/product/sensor/pressure-sensors/pressure-sensors-for-iot/dps310/.
[19] EASYMINI DUAL DEPLOYMENT ALTIMETER. URL: https://www.apogeerockets.com/Electronics-Payloads/Dual-Deployment/EasyMini.
[20] Fehskens-Malewicki Equations. URL: https://www.rocketmime.com/rockets/rckt_eqn.html.
[21] Fin Flutter Revisisted (Again). URL: https://www.apogeerockets.com/Peak-of-Flight/Newsletter615.
[22] GRF5020. URL: https://www.mouser.com/ProductDetail/Guerrilla-RF/GRF5020?qs=sGAEpiMZZMv9d7nAGy9nTBPfu2Zia4eAkYoUGvERvCSAa3D%3D.
[23] M.K. Gupta. "Investigations on Properties of Glass Fibre Reinforced Polymer Composite". In: American Journal of Polymer Science and Engineering (2018).
[24] IMU: BMI160. URL: https://www.bosch-sensortec.com/products/motion-sensors/imus/bmi160/.
[25] Iris Ultra 96" Compact Parachute - 50lb @ 20fps; 28lb @ 15fps. URL: https://shop.fruitychutes.com/collections/iris-ultra-compact-chutes/products/iris-ultra-compact-parachute-96inch-50lbs-20fps-28lbs-15fps.
[26] LM2596. URL: https://www.ti.com/product/LM2596.
[27] Magnetic Switch. URL: https://www.featherweightaltimeters.com/store/p4/Magnetic_Switch.html.
[28] MPL3115A2. URL: https://www.digikey.com/en/products/detail/nxp-usa-inc/MPL3115A2/2817529.
[29] MPU-9250. URL: https://www.digikey.com/en/products/detail/tdk-invensense/MPU-9250/4626449.
[30] Notes on a generic parachute opening force analysis. URL: https://arc.aiaa.org/doi/10.2514/6.1986-2440.
[31] OpenRocket User's Guide. OpenRocket wiki. URL: https://wiki.openrocket.info/User%27s_Guide.
[32] Othermill Pro - Compact Precision CNC + PCB Milling Machine. URL: https://www.adafruit.com/product/2323.
[33] Parachute Deployment Bags, Parachute Liners, Nomex Blankets. URL: https://fruitychutes.com/parachute_recovery_systems/parachute-deployment-bags-parachute-liners-nomex-blankets#successful-deployment.
[34] Pressure sensor BMP280. URL: https://www.bosch-sensortec.com/products/environmental-sensors/pressure-sensors/bmp280/.
[35] Raspberry Pi 4 4GB Model B. URL: https://www.canakit.com/raspberry-pi-4-4gb.html.
[36] RocketPy's User Guide. Version 1.0.1. URL: https://docs.rocketpy.org/en/latest/user/index.html.
[37] Charles Rogers and David Cooper. Rasaero II User Guide. URL: https://rasaero.com/dloads/RASAero%20II%20Users%20Manual.pdf.
[38] Screw Switch. URL: https://www.missileworks.com/store#!/Screw-Switch/p/38076724/category=5760490.
[39] Si4464. URL: https://www.silabs.com/wireless/proprietary/ezradiopro-sub-ghz-ics/device.si4464?tab=specs.
[40] SparkFun GPS Breakout - Chip Antenna, SAM-M10Q (Qwiic). URL: https://www.sparkfun.com/products/21834.
[41] StratoLoggerCF Altimeter. URL: http://www.perfectflite.com/SLCF.html.
[42] Summary of Flutter Experiences as a Guide to the Preliminary Design of Lifting Surfaces on Missiles. URL: https://ntrs.nasa.gov/citations/19930085030.
[43] Tacho Lycos 2023 NASA Student Launch Critical Design Review. URL: https://tacholycostesthome.files.wordpress.com/2023/01/nc-state-university-2023-cdr-1.pdf.
[44] Tacho Lycos 2024 NASA Student Launch Critical Design Review. URL: https://ncsurocketry.org/wp-content/uploads/2024/01/north-carolina-state-university-2024-cdr-report.pdf.
[45] West Systems 105/206 Epoxy Resin Datasheet. URL: https://www.westsystem.com/app/uploads/2022/12/105-206-Epoxy-Resin.pdf.

9 Appendices

9.1 Additional Full-Scale Information

9.1.1 2/22/2025 Flight Launch Day Checklist

Flight Launch Day Checklist

9.1.2 3/8/2025 VDF/PDF Flight Launch Day Checklist

Full-Scale Night Before Checklist & Packing List

Night Before Checklist

Full-Scale Launch Day Checklist

Full-Scale Launch Day Checklist

Full-Scale Post-Launch Checklist

Full-Scale Post-Launch Checklist

9.2 Additional Subscale Information

Subscale Launch Procedure / Checklist

Subscale Launch Day Checklist

9.3 Team / Club Documentation and Information

NC State University High-Powered Rocketry Club Constitution

NC State University High-Powered Rocketry Club Constitution

9.3.1 Social Media Accounts

Website	Instagram	Facebook	X	LinkedIn	Tiktok	Youtube
ncsurocketry.org	@ncsurocketry	/TachoLycos	@NCSURocketry	/tacholycos	@ncsurocketry	@tacholycos2206

Signed Safety Acknowledgment/Contract

Signed Safety Acknowledgment/Contract

- Details the safety agreement signed by team members for compliance.

Team Hour Tracker

	Abigail Kuppler Integration	Katelyn Yount Team Lead	James Holley Structures	Aubri Sprouse Aerodynamics	Trent Couse Recovery	Sam Patterson Payload	Connor Swanson Payload	Ryan Keever Payload	Megan Rink Safety	Tyler Treasurer	Ben Radspinner Outreach	Total	
8/16 - 9/1	10	30	18	4	6	15	12	8	0	0	0	103	Proposal Total
9/2 - 9/8	14	31	20	14	23	15	10	10	4.5	8	4	153.5	256.5
9/9 - 9/15	3	5	12	4	15	8	8	8	0	0	0	63	PDR Total
9/16 - 9/22	5	8	12	6	9	16	6	6	0	0	0	68	1052
9/23 - 9/29	6	19	8	3	4	35	25	15	0	0	0	115	
9/30-10/6	11	8	10	3	10	4	3	7	0	0	0	56	
10/7 - 10/13	12	24	22	12	25	9	10	10	0	0	0	124	
10/14 - 10/20	36	40	30	22	35	10	20	16	0	0	0	209	
10/21 - 10/27	49	70	40	30	46	48	50	40	27	17	0	417	
10/28 - 11/3	2	4	6	2	2	8	3	4	0	0	0	31	CDR Total
11/4 - 11/10	6	6	15	2	15.5	7	10	5	0	0	0	66.5	1021
11/11 - 11/17	37	44	48	10	48.5	48	40	40	0	0	0	315.5	
11/18-11/24	2	4	6	4	2	5	4	3	0	0	0	30	
11/25-12/1	3	15	8	8	6	8	3	3	0	0	0	54	
12/2-12/8	4	6	4	15	3	3.5	3	3	0	0	0	41.5	
12/9-12/15	4	14	2	2	3	3.5	3	5	0	0	0	36.5	
12/16-12/22	9	14	2	1	2	2.5	2	5	0	0	0	37.5	
12/23/12/29	8	18	8	0	7	15	18	20	0	2	0	96	
12/30-1/5	19	36.5	28	20	16	20	32	25	0	0	0	196.5	
1/6-1/8	16	26	10	6	14	15	14	15	0	0	0	116	FRR Total
1/9-1/12	4	6	12	4	4	8	10	10	0	0	0	58	2112
1/13-1/19	6	10	18	5	16	18	15	20	0	0	0	108	
1/20-1/26	6	40	22	10	12	45	35	35	0	0	0	205	
1/27-2/2	4	15	30	4	14	10	0	10	0	0	0	87	
2/3-2/9	6	8	24	2	4	6	5	4	0	0	0	59	
2/10-2/16	15	15	24	5	14	25	20	20	0	0	0	138	
2/17-2/23	14	51	38	15	61	110	70	70	0	0	0	429	
2/24-3/2	5	21	18	12	32	7	35	23	0	0	0	153	
3/3-3/9	22	55	30	25	44	45	60	50	0	0	0	309	
3/10-3/16	64	60	38	20	5	39	48	30	0	6	140	450	

- Details the number of hours each Team Lead and relative officer has worked for the FRR milestone (along with proposal, PDF and CDR).

9.4 Safety and Training Materials

NC State University High-Powered Rocketry Club Lab Safety Quiz

NC State University High-Powered Rocketry Club Lab Safety Quiz

- Contains the quiz questions used for training and certifying lab safety knowledge.

High-Powered Rocketry Club Safety Handbook

HPRC Safety Handbook

- Detailed safety guidelines and procedures for the NC State High-Powered Rocketry Club. Includes local RSO rules for Tripoli Rocketry and NAR.

Wake County Waste Disposal Guidelines and Resource Website

Wake County Waste Disposal Guidelines and Resource Website

- A resource website for proper disposal practices in compliance with county regulations.

Energetics Safety

Black Powder Safety Presentation

- A presentation going over the safe handling of energetics and black powder.

First Aid Kit

Safety Bin Inventory

- A detailed list of all of the safety equipment located in the lab's safety bins (first aid kit). Items are located in bins in the NCSU HPRC lab and are transported to the launch field.

Welding Training

Welding Training Handbook

- Document detailing the safe procedure for welding.

9.5 Technical Datasheets

West Systems 105/206 Epoxy Resin Datasheet

West Systems 105/206 Epoxy Resin Datasheet

- Technical information on the properties and use of epoxy resin for rocket construction.

9.6 Mental Health and Support Resources

Mental Health Resource Slide for HPRC General Body Meetings

- Includes resources and contacts for mental health support. Shared during weekly club meetings (General Body Meetings).


NC STATE
Lighten Your Pack.
You are not alone.
Whether you're in immediate crisis or need long-term support and care, the NC State community can help. There are a variety of resources available for you.
In a mental health emergency, call the Counseling Center at 919.515.2423
In a life-threatening emergency, call University Police at 919.515.3000
For additional mental health resources, visit go.ncsu.edu/findhelpnow
Need help navigating resources? Contact a University Housing staff member or the RA on-call.
Call or text 988 to reach the Suicide and Crisis Lifeline.